Carrillo Handrail Systems, Inc.
Think Different

RECEIVED
OCT 06 2014
OCCUPATIONAL SAFETY AND HEALTH STANDARDS BOARD

September 30, 2014

Jose M Carrillo
CEO/Carrillo Handrail Systems Inc.
5578 Lilyview way
Elk Grove, CA 95757

Re: Title 8 Section 1670 (b) (17)

To: California Occupational Safety and Health Standards Board

My name is Jose M. Carrillo (Manny). I am the CEO of Carrillo Handrail Systems Inc. as well as the Inventor of the Safety Anchor Post System® or "SAPS", US Patent #8,656,652 B2.

I am petitioning the Occupational Safety and Health Standards Board to Amend Title 8 Section 1670 (b) (17) regulation and take into account designs such as the Safety Anchor Post System®. I believe that people like myself, that come from the trades hold incomparable knowledge that can alleviate some of the injuries and illnesses that relate to our perspective fields. It's often said that regulation only changes after a tragedy. I would very much appreciate a change in Regulation and see prosperity before the tragedy.

SUMMARY

I invented the Safety Anchor Post System® out of necessity for my own safety and the safety of all construction workers who work on leading edges, constructing some of our super structures and highways that we all use to live, work and/or play.

In my 30 years as a commercial concrete carpenter, I have witness numerous accidents including many falls due to negligence, stupidity, or plain ignorance.

The idea for the SAPS came to me after a "Slab Grabber" a handrail post that we were installing on the 19th floor of a high rise became dislodged. The Slab Grabber's adjusting mechanism consists of an internal coil rod that can open and close a vise clamp to the desired thickness of concrete or wooden flooring. In the incident that I have referenced, the internal coil rod broke into 2 pieces thus loosing the lower part of the clamp, including part of the coil rod that fell 19 floors. The immediate corrective action by the contractor was to contact the manufacturer and find out what could have caused this to happen. A poor excuse by the manufacturer lead me to become proactive and research other possible means so that the same accident could not happen to others.

5578 Lilyview Way
Elk Grove, CA 95757
manny@safetyanchorpost.com
916-690-3935

My conclusion after seeing both parts of the Slab Grabber was that there was clear evidence of rust where the coil rod broke and that is why the Slab Grabber failed. The Slab Grabber is equipped with a bolt head on the coil rod. To tighten and loosen the post, the end user needs to use either an adjustable wrench or socket to rotate the coil rod bolt up and down. The Slab Grabber is designed with an opening/collar at the top of the post for the coil rod bolt to function and stay parallel to the post thus keeping everything in line. Moisture and/or rain entered from the top hole and cause the development of rust on the coil rod. Unfortunately by it's design there is no physical way to inspect the entire coil rod prior to any use.

My corrective solution was to "Think Different". So, I developed a new concept for an ever-evolving industry that is very competitive and heavily regulated. One can change a behavior and by changing that behavior, one can make a difference. So that is when I came up with the idea for the Safety Anchor Post System® or "SAPS". I sketched out my ideas, did hundreds of hours of research and then sent my idea off to the United States Patent office. I have since had my idea engineered, and third party test the product, as well as developed a series of handrail posts that can be used in all concrete construction.

The theory behind the Safety Anchor Post System® was a clear set of principals:

Safety First: because people depend on us

Simplicity: with the end user in mind

Efficiency: for maximum productivity

All SAPS are surface mounted onto a preset embed in concrete. By having handrail posts threaded onto an embed set in concrete; the base becomes the solid foundation with the engineering to support a tie-off point for the end user.

By engineering a handrail post with a "D" ring, opportunity presents itself. Multiple anchor points for tie-off and a near by anchor point for rescue operation if needed.

On Aug. 20, 2014, I spoke with Eric Burg, Acting Principal Safety Engineer for CAL/OSHA Research & Standards (925-348-3162); he advised me of the current Title 8 Section 1670 (b) (17) section of the California Code of Regulations prohibits fall arrest systems to be attached to guard rails. After reviewing the section, my initial statement of reasons is as follows:

CALIFORNIA CODE OF REGULATIONS

TITLE 8: Chapter 4, Subchapter 4, Article 24, Section 1670 (b) (10) and (17) of the Construction Safety Orders

Use of Guardrails as Anchorage for Personal Fall Arrest Systems

Pg. 1 Paragraph 1

Occupational Safety and Health Standards Board (board) staff notes that Title 8 section 1670(b)(17) of the Construction Safety Orders (CSO) prohibits the use of guardrails as anchor points for personal fall arrest systems (PFAs). However, board staff notes that federal OSHA in 29 CFR 1926.502, Subpart M, Fall Protection in the Construction Industry, Appendix C II, (h)(ii) states that federal OSHA recognizes that situations may exist where it is acceptable to use guardrails or railings for use as an anchor point provided they have been designed for such use. Federal OSHA also addresses the use of anchorages used for PFAs in 29 CFR 1926.502(d)(15)(i) and (ii), which is comparable to California's section 1670(b)(10). Both standards require anchorage for PFAs to be able to support at least 5000 pounds per employee attached. Both 29 CFR 1926.502(d)(23) and California's section 1670(b)(17) state that PFAs are not to be attached to guardrails except as specified in the respective standards, and, in the case of the federal standard, as specified in Appendix C to Subpart M. Moreover, federal OSHA has issued a Standards Interpretation and Compliance Letter dated June 8, 1998, in which it clarified that it recognizes that there may be a need for employers to devise anchor points from existing structures. As an example, they included guardrails or railings provided they have been designed for use as an anchor point.

Pg. 2 Paragraph 3

The proposed revisions are necessary to provide the construction industry with the flexibility of alternative means of anchorage for their employees who wear PFAs. Employers would be able to solve on-the-job anchorage problems by either engineering their own guardrail anchorage which complies with the proposed amendment's anchorage requirements or purchase manufactured guardrail systems which have been engineered in accordance with the anchorage criteria specified in section 1670(b)(10). Currently, employers who cannot find suitable anchorage points as provided by the building's structural members would have to provide alternative means of addressing an employee's fall protection (e.g., additional guardrails, safety nets, fall protection plan). The proposal would permit the employer to use an engineered guardrail as anchorage, obviating the need for additional or alternative measures. The proposal is necessary to further ensure employee safety from fall injuries or death by providing another option to secure PFAs by utilizing guardrails that are designed to safely support the load and not fail. The proposal is also necessary to ensure that employers understand that scaffold railings are not used for PFAs anchorage and what it means for a guardrail anchor point to be designed to safely withstand the load.

The Safety Anchor Post System® is fully engineered by:

VAK Construction Engineering Services, LLC

Vello A. Koiv
Registered Professional Engineer CA
No. C039224 EXP. 12-15

Engineering of the Safety Anchor Post System® was completed and stamped by the engineer on May 10, 2013 for Carrillo Handrail Systems Inc., titled SAP HANDRAIL.

The Safety Anchor Post System® or "SAPS", was designed with the end user in mind.

As technology advances we must do the same, as the benefit is mutual. The Safety Anchor Post System® can make a world of difference to an ever changing and evolving industry that is very competitive and heavily regulated. The rules are not going away. Either the contractor complies or he/she can be subjected to heavy fines and put out of business. As for the end-user he/she can demand/request other systems for the particular task. Our industry is not a one size fits all, so our safety handrail devices shouldn't be either. Every end-user has the responsibility to report to our employers what works and what does not, because after all we are the ones putting ourselves out there everyday. The equipment that needs to be used is vital information to the contractor when allocating budgets are set. Equipment that does not work equates into wasted dollars for the company and a loss for the worker. Now the worker becomes a risk factor and not an asset to the company.

Supporting Data:

4OSHA Injury and Illness Prevention Program; White Paper January 2012

<u>What are the Cost of Workplace Injuries, Illness and Death to Employers, Workers and the Nation?</u>

When workers are killed, are injured or become ill, there are substantial costs beyond those borne by employers. A variety of approaches can be used to estimate these costs. For example, Viscusi and Aldy (2003) provided estimates of the monetary value of each life lost. OSHA updated these estimates (to account for inflation) to 2010 dollars, yielding a value of $8.7 million for each life lost. Multiplying this value by the 4,547 workplace deaths reported by the Bureau of Labor Statistics for 2010, OSHA estimates the annual cost of known workplace fatalities to be nearly $40 billion.

This estimate does not include the cost of non-fatal injuries, or of occupational illnesses like cancer and lung disease. These illnesses generally may occur many years or even decades after workers are exposed and are therefore seldom recorded in government statistics or employer surveillance activities.

<u>What is the Evidence that Injury and Illness Prevention Programs Protect Workers and Improve the "Bottom Line"?</u>

Numerous studies have examined the effectiveness of injury and illness prevention programs at both the establishment and corporate levels (e.g., Alsop and LeCouteur, 1999; Bunn et al., 2001; Conference Board, 2003; Huang et al., 2009; Lewchuk, Robb, and Walters, 1996; Smitha et al., 2001; Torp et al., 2000; Yassi, 1998). This research demonstrates that such programs are effective in transforming workplace culture; leading to reductions in injuries, illnesses and fatalities; lowering workers' compensation and other costs; improving morale and communication; enhancing image and reputation; and improving processes, products and services. The studies also highlight important characteristics of effective programs, including management commitment and leadership, effective employee participation, integration of health and safety with business planning and continuous program evaluation. They suggest that programs without these features are not as effective (Shannon et al., 1996, 1997; Gallagher, 2001; Gallagher et al., 2003; Liu et al., 2008).

So in conclusion, despite the combined efforts of employers, workers, unions, safety professionals and regulators, more than 4,500 workers lose their lives and more than four million are seriously injured each year. Tens of thousands more die or are incapacitated because of occupational illnesses including many types of cancer and lung disease. The human toll from this loss is incalculable and the economic toll is enormous.

So as I stated at the beginning of my letter, I am petitioning the Occupational Safety and Health Standards Board to Amend Title 8 Section 1670 (b) (17) regulation and take into account designs such as the Safety Anchor Post System®.

I would like to thank you in advance for your time and consideration and look forward to hearing from you about a change in the current regulation. If should have any questions, please reach out to me at 916-690-3935. I would welcome the opportunity to meet with your panel in person to answer and questions that they might have.

Sincerely,

Jose M Carrillo
CEO, Carrillo Handrail Systems Inc.

Attachments:

Initial Statement of Reasons
4OSHA Injury and Illness Prevention Program; White Paper January 2012
Photo of Slab Grabber
U. S. Bureau of Labor Statistics, U.S. Department of Labor, 2013
Safety Anchor Post, Engineering; by VAC Construction Engineering Services, LLC
Safety Anchor Post System U.S. Patent 8, 656,652 B1

STATE OF CALIFORNIA - DEPARTMENT OF INDUSTRIAL RELATIONS ARNOLD SCHWARZENEGGER, *Governor*

OCCUPATIONAL SAFETY
AND HEALTH STANDARDS BOARD
2520 Venture Oaks Way, Suite 350
Sacramento, CA 95833
(916) 274-5721
FAX (916) 274-5743
www.dir.ca.gov/oshsb

Attachment No. 2

INITIAL STATEMENT OF REASONS

CALIFORNIA CODE OF REGULATIONS

TITLE 8: Chapter 4, Subchapter 4, Article 24, Section 1670(b)(10) and (17)
of the Construction Safety Orders

Use of Guardrails as Anchorage for Personal Fall Arrest Systems

SUMMARY

Occupational Safety and Health Standards Board (board) staff notes that Title 8 section 1670(b)(17) of the Construction Safety Orders (CSO) prohibits the use of guardrails as anchor points for personal fall arrest systems (PFAs). However, board staff notes that federal OSHA in 29 CFR 1926.502, Subpart M, Fall Protection in the Construction Industry, Appendix C II, (h)(ii) states that federal OSHA recognizes that situations may exist where it is acceptable to use guardrails or railings for use as an anchor point provided they have been designed for such use. Federal OSHA also addresses the use of anchorages used for PFAs in 29 CFR 1926.502(d)(15)(i) and (ii), which is comparable to California's section 1670(b)(10). Both standards require anchorage for PFAs to be able to support at least 5000 pounds per employee attached. Both 29 CFR 1926.502(d)(23) and California's section 1670(b)(17) state that PFAs are not to be attached to guardrails except as specified in the respective standards, and, in the case of the federal standard, as specified in Appendix C to Subpart M. Moreover, federal OSHA has issued a Standards Interpretation and Compliance Letter dated June 8, 1998, in which it clarified that it recognizes that there may be a need for employers to devise anchor points from existing structures. As an example, they included guardrails or railings provided they have been designed for use as an anchor point.

Board staff concurs with federal OSHA as expressed in its Appendix C to Subpart M described above, to the extent that there are situations where suitable anchorage for PFAs is not readily available and there is a need for the employer to devise an anchor point from existing structures, such as a guardrail. Board staff also believes that if a guardrail has been designed (engineered) to meet the strength requirement stated in section 1670(b)(10) by a registered engineer, that such point of attachment meets the definition of "anchorage" in section 1504 of the CSO, and therefore is acceptable for use as a "...secure point of attachment..." for an employee's PFA. Consistent with the aforementioned federal OSHA documents, board staff proposes section 1670(b)(17) be amended to allow guardrails to be used as anchorage for PFAs provided (1) they are engineered for such use a California registered civil or structural engineer (P.E.) to meet the criteria as stated in section 1670(b)(10), and (2) other conditions are met which include, but are

not limited to, onsite maintenance of P.E. approved design documentation, identification of anchor points, and supervision of employees by qualified persons. Language clarifying the phrase "...safely support" and an exception is included which would prohibit the railings of scaffold systems to be used as anchorage.

SPECIFIC PURPOSE AND FACTUAL BASIS OF PROPOSED ACTION

Section 1670. Personal Fall Arrest Systems, Personal Fall Restraint Systems and Positioning Devices.

This section contains California's personal fall protection system requirements and addresses the use, care, and maintenance of PFAs, fall restraint and positioning device systems which include, but are not limited to the following: (1) trigger heights for the use of personal fall protection systems, (2) criteria for the design, use, and care of PFAs when used on scaffolds, in conjunction with lanyards, (3) lifelines, strength requirements for personal fall protection components, (4) methods of attaching lifelines to employees in elevator shafts, (5) use of self-retracting lifelines and lanyards, (6) use of body belts, (7) employee rescue in the event of an employee fall, and (8) anchorage criteria for PFAs.

Subsection (b) specifically addresses the use of PFAs and prohibits the use of body belts as part of a PFA system after January 1, 1998. Subsection (b)(17) states that PFAs shall not be attached to hoists, except as specified in the CSO, nor shall they be attached to guardrails. Revisions are proposed to add language in subsection (b)(17) that would clarify what is meant by the phrase "...safely support," and include four new paragraphs, A-D, that would permit employers to attach a PFA to a guardrail if (1) it has been designed (engineered) for such use by a registered engineer (P.E.) to safely support the intended load(s), as specified in the anchorage requirement contained in the preceding subsection (b)(10) of section 1670, (2) require engineering/design documentation be maintained onsite (e.g., design calculations, identification of anchor points, etc.), (3) require all anchor points be clearly identified and inspected by a qualified person before and after each use to ensure they are in a condition that will safely support the load, and (4) require that employees who use guardrail anchor points are supervised by a qualified person to ensure that they use the guardrail anchorage that have been inspected and used in accordance with their design specifications. An exception statement is proposed that will specifically exclude scaffold railings from the provisions of section 1670(b)(17).

The proposed revisions are necessary to provide the construction industry with the flexibility of alternative means of anchorage for their employees who wear PFAs. Employers would be able to solve on-the-job anchorage problems by either engineering their own guardrail anchorage which complies with the proposed amendment's anchorage requirements or purchase manufactured guardrail systems which have been engineered in accordance with the anchorage criteria specified in section 1670(b)(10). Currently, employers who cannot find suitable anchorage points as provided by the building's structural members would have to provide alternative means of addressing an employee's fall protection (e.g., additional guardrails, safety nets, fall protection plan). The proposal would permit the employer to use an engineered guardrail as anchorage, obviating the need for additional or alternative measures. The proposal is necessary to further ensure employee safety from fall injuries or death by providing another

option to secure PFAs by utilizing guardrails that are designed to safely support the load and not fail. The proposal is also necessary to ensure that employers understand that scaffold railings are not used for PFAs anchorage and what it means for a guardrail anchor point to be designed to safely withstand the load.

DOCUMENTS RELIED UPON

1. Letter to Jere W. Ingram, Chairman, Occupational Safety and Health Standards Board from John McCullough, C.S.P., Assistant Vice President, ABD Services dated March 5, 2001.
2. OSHA Regulations (Standards - 29 CFR), Personal Fall Arrest Systems - Non-Mandatory Guidelines for Complying with 1926.502(d) - 1926 Subpart M App C, specifically (h)(ii).
3. OSHA Standards Interpretation and Compliance Letters, 6/08/1998 - Fall protection anchorage points: guardrail systems and cranes.
4. OSHA Regulations (Standards - 29 CFR) Fall protection systems criteria and practices. - 1926.502.

These documents are available for review Monday through Friday from 8:00 a.m. to 4:30 p.m. at the standards board office located at 2520 Venture Oaks Way, Suite 350, Sacramento, California.

REASONABLE ALTERNATIVES THAT WOULD LESSEN ADVERSE ECONOMIC IMPACT ON SMALL BUSINESSES

No reasonable alternatives were identified by the board and no reasonable alternatives identified by the board or otherwise brought to its attention would lessen the impact on small businesses.

SPECIFIC TECHNOLOGY OR EQUIPMENT

This proposal will not mandate the use of specific technologies or equipment.

COST ESTIMATES OF PROPOSED ACTION

Costs or Savings to State Agencies

No costs or savings to state agencies will result as a consequence of the proposed action.

Impact on Housing Costs

The board has made an initial determination that this proposal will not significantly affect housing costs.

Impact on Businesses

The board has made an initial determination that this proposal will not result in a significant, statewide adverse economic impact directly affecting businesses, including the ability of California businesses to compete with businesses in other states.

Cost Impact on Private Persons or Businesses

The board is not aware of any cost impact that a representative private person or business would necessarily incur in reasonable compliance with the proposed action.

Costs or Savings in Federal Funding to the State

The proposal will not result in costs or savings in federal funding to the state.

Costs or Savings to Local Agencies or School Districts Required to be Reimbursed

No costs to local agencies or school districts are required to be reimbursed. See explanation under "Determination of Mandate."

Other Nondiscretionary Costs or Savings Imposed on Local Agencies

This proposal does not impose nondiscretionary costs or savings on local agencies.

DETERMINATION OF MANDATE

The Occupational Safety and Health Standards Board has determined that the proposed standard does not impose a local mandate. Therefore, reimbursement by the state is not required pursuant to Part 7 (commencing with section 17500) of Division 4 of the Government Code because the proposed amendment will not require local agencies or school districts to incur additional costs in complying with the proposal. Furthermore, this standard does not constitute a "new program or higher level of service of an existing program within the meaning of section 6 of Article XIII B of the California Constitution."

The California Supreme Court has established that a "program" within the meaning of section 6 of Article XIII B of the California Constitution is one which carries out the governmental function of providing services to the public, or which, to implement a state policy, imposes unique requirements on local governments and does not apply generally to all residents and entities in the state. (County of Los Angeles v. State of California (1987) 43 Cal.3d 46.)

The proposed standard does not require local agencies to carry out the governmental function of providing services to the public. Rather, the standard requires local agencies to take certain steps to ensure the safety and health of their own employees only. Moreover, the proposed standard does not in any way require local agencies to administer the California Occupational Safety and Health program. (See City of Anaheim v. State of California (1987) 189 Cal.App.3d 1478.)

The proposed standard does not impose unique requirements on local governments. All state, local and private employers will be required to comply with the prescribed standard.

EFFECT ON SMALL BUSINESSES

The board has determined that the proposed amendment may affect small businesses. However, no economic impact is anticipated.

ASSESSMENT

The adoption of the proposed amendment to this standard will neither create nor eliminate jobs in the State of California nor result in the elimination of existing businesses or create or expand businesses in the State of California.

ALTERNATIVES THAT WOULD AFFECT PRIVATE PERSONS

No reasonable alternatives have been identified by the board or have otherwise been identified and brought to its attention that would be more effective in carrying out the purpose for which the action is proposed or would be as effective and less burdensome to affected private persons than the proposed action.

OSHA

Healthier Workers. Safer Workplaces. A Stronger America.

Injury and Illness Prevention Programs

White Paper

January 2012

Introduction/Executive Summary

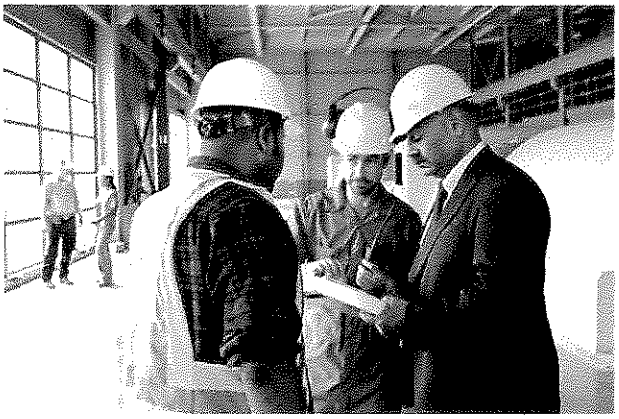

An *injury and illness prevention program*,[1] is a proactive process to help employers find and fix workplace hazards before workers are hurt. We know these programs can be effective at reducing injuries, illnesses, and fatalities. Many workplaces have already adopted such approaches, for example as part of OSHA's cooperative programs. Not only do these employers experience dramatic decreases in workplace injuries, but they often report a transformed workplace culture that can lead to higher productivity and quality, reduced turnover, reduced costs, and greater employee satisfaction.

Thirty-four states and many nations around the world already require or encourage employers to implement such programs. The key elements common to all of these programs are management leadership, worker participation, hazard identification and assessment, hazard prevention and control, education and training, and program evaluation and improvement.

Based on the positive experience of employers with existing programs, OSHA believes that injury and illness prevention programs provide the foundation for breakthrough changes in the way employers identify and control hazards, leading to a significantly improved workplace health and safety environment. Adoption of an injury and illness prevention program will result in workers suffering fewer injuries, illnesses and fatalities. In addition, employers will improve their compliance with existing regulations, and will experience many of the financial benefits of a safer and healthier workplace cited in published studies and reports by individual companies, including significant reductions in workers' compensation premiums.

Background

In the four decades since the *Occupational Safety and Health Act* (OSH Act) was signed into law, workplace deaths and reported occupational injuries have dropped by more than 60 percent. Yet the nation's workers continue to face an unacceptable number of work-related deaths, injuries and illnesses, most of them preventable:

- Every day, more than 12 workers die on the job – over 4,500 a year.
- Every year, more than 4.1 million workers suffer a serious job-related injury or illness.

An enhanced focus on prevention is needed to bring these numbers down. To accomplish this, an effective, flexible, commonsense tool is available that can dramatically reduce the number and severity of workplace injuries and illnesses: the injury and illness prevention program. This tool helps employers find hazards and fix them *before* injuries, illnesses or deaths occur. It helps employers meet their obligation under the OSH Act to "furnish to each of his employees employment and a place of employment which are free from recognized hazards that are causing or are likely to cause death or serious physical harm to his employees." It also helps employers avoid the significant costs associated with injuries and illnesses in the workplace.

Injury and illness prevention programs are not new, nor are they untested. Most large companies whose safety and health achievements have been recognized through government or industry awards cite their use of injury and illness prevention programs as their key to success. Convinced of the value, effectiveness, and feasibility of these programs, many countries around the world now require employers to implement and maintain them. These countries include Canada, Australia, all 27 European Union member states, Norway, Hong Kong, Japan and Korea. This initiative also follows the lead of 15 U.S. states that have already implemented regulations requiring such programs.

How Does an Injury and Illness Prevention Program Work?

Most successful injury and illness prevention programs include a similar set of commonsense elements that focus on finding all hazards in the workplace and developing a plan for preventing and controlling those hazards. Management leadership and active worker participation are essential to ensuring

that all hazards are identified and addressed. Finally, workers need to be trained about how the program works and the program needs to be periodically evaluated to determine whether improvements need to be made.

These basic elements – management leadership, worker participation, hazard identification and assessment, hazard prevention and control, education and training, and program evaluation and improvement – are common to almost all existing health and safety management programs. Each element is important in ensuring the success of the overall program, and the elements are interrelated and interdependent.

When it comes to injury and illness prevention programs, every business is different, and one size certainly does not fit all. Employers who implement injury and illness prevention programs scale and adapt these elements to meet the needs of their organizations, depending on size, industry sector or complexity of operations.

What Are the Costs of Workplace Injuries, Illnesses and Deaths to Employers, Workers and the Nation?

The main goal of injury and illness prevention programs is to prevent workplace injuries, illnesses and deaths, the suffering these events cause workers, and the financial hardship they cause both workers and employers.

Workplace incidents cause an enormous amount of physical, financial and emotional hardship for individual workers and their families. Combined with insufficient workers' compensation benefits and inadequate medical insurance, workplace injuries and illnesses can not only cause physical pain and suffering but also loss of employment and wages, burdensome debt, inability to maintain a previous standard of living, loss of home ownership and even bankruptcy. When implemented effectively, injury and illness prevention programs can help workers and their families avoid these disruptive and sometimes calamitous impacts on their lives.

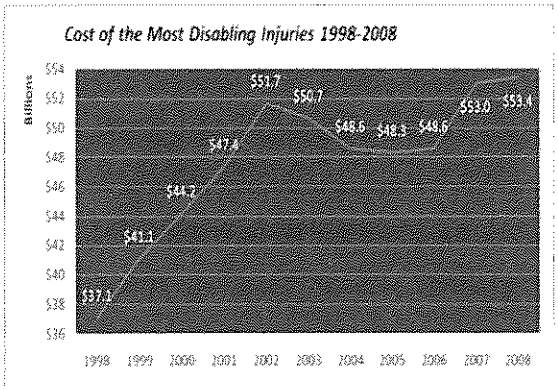

Source: Liberty Mutual Research Institute, 2010.

At the same time, these programs will help employers avoid the substantial cost impacts and business disruptions that accompany occupational injuries, illnesses and deaths. One widely-cited source regarding estimates of the magnitude of these costs is the Liberty Mutual Research Institute, which reports the direct cost of the most disabling workplace injuries in 2008 to be $53 billion (Liberty Mutual Research Institute, 2010).2 Another source, the National Academy of Social Insurance (NASI), estimates the annual workers' compensation benefits paid for all compensable injuries and illnesses in 2009 at $58 billion (National Academy of Social Insurance, 2011). NASI further reports the total costs paid by employers for workers' compensation increased from $60 billion in 2000 to $74 billion in 2009.

In addition to these direct costs, employers incur a variety of other costs that may be hidden or less obvious when an employee is injured or ill, but in most cases involve real expenditures of budget or time. These expenditures are commonly referred to as *indirect* costs and can include:

- Any wages paid to injured workers for absences not covered by workers' compensation;
- The wage costs related to time lost through work stoppage;
- Administrative time spent by supervisors following injuries;
- Employee training and replacement costs;
- Lost productivity related to new employee learning curves and accommodation of injured employees; and
- Replacement costs of damaged material, machinery and property.

OSHA has historically used the results of one study (Stanford University, 1981) that found the indirect costs can range from 1.1 (for the most severe injuries) to 4.5 (for the least severe injuries) times the direct costs.3

When workers are killed, are injured or become ill, there are substantial costs beyond those borne by employers. A variety of approaches can be used to estimate these costs. For example, Viscusi and Aldy (2003) provided estimates of the monetary value of each life lost. OSHA updated these estimates (to account for inflation) to 2010 dollars, yielding a value of $8.7 million for each life lost. Multiplying this value by the 4,547 workplace deaths reported by the Bureau of Labor Statistics for 2010, OSHA estimates the annual cost of known workplace fatalities to be nearly $40 billion.

This estimate does not include the cost of non-fatal injuries, or of occupational illnesses like cancer and lung disease. These illnesses generally may occur many years or even decades after workers are exposed and are therefore seldom recorded in government statistics or

> "Establishing safety as a value rather than a priority tells our employees and our customers that safety is built into our culture, not something we do to merely comply with regulations.
>
> Our excellent safety performance over the past seven years has been a key factor in reducing our insurance cost. Our low EMR [Experience Modification Rate], incidents rates, and SHARP Management System have impressed our customers and, in many cases, was a key factor in selecting Parsons to perform their project."
>
> *– Charles L. Harrington, Chairman & CEO, Parsons Corp.*
>
> **Source: National Safety Council.**

employer surveillance activities.

The human and economic costs of these conditions are indisputably enormous. Leigh et al. (1997) estimated that more than 60,000 workers die each year from occupational illnesses, and more than 850,000 develop new illnesses annually. Similarly, Steenland et al. (2003) estimated that between 10,000 and 20,000 workers die each year from cancer due to occupational exposures, and between 5,000 and 24,000 die from work-related Chronic Obstructive Pulmonary Disease.

In summary, the number and costs of workplace injuries, illnesses and fatalities are unacceptably high. Injury and illness prevention programs have been proven to help employers and society reduce the personal, financial and societal costs that injuries, illnesses and fatalities impose. As described below, the thousands of workplaces that have implemented these programs in some form have already witnessed the resulting benefits, in the form of higher efficiency, greater worker productivity and lower costs.

What Is the Evidence that Injury and Illness Prevention Programs Protect Workers and Improve the "Bottom Line"?

Numerous studies have examined the effectiveness of injury and illness prevention programs at both the establishment and corporate levels (e.g., Alsop and LeCouteur, 1999; Bunn et al., 2001; Conference Board, 2003; Huang et al., 2009; Lewchuk, Robb, and Walters, 1996; Smitha et al., 2001; Torp et al., 2000; Yassi, 1998). This research demonstrates that such programs are effective in transforming workplace culture; leading to reductions in injuries, illnesses and fatalities; lowering workers' compensation and other costs; improving morale and communication; enhancing image and reputation; and improving processes, products and services. The studies also highlight important characteristics of effective programs, including management commitment and leadership, effective employee participation, integration of health and safety with business planning and continuous program evaluation. They suggest that programs without these features are not as effective (Shannon et al., 1996, 1997; Gallagher, 2001; Gallagher et al., 2003; Liu et al., 2008).

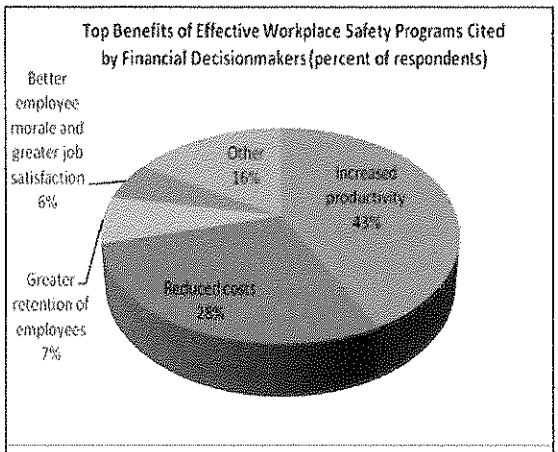

Source: Huang et. al., 2009. Data based on responses from 231 U.S. companies with 100 or more employees.

One study (Smitha et al., 2001) focused on manufacturing facilities in 13 states with mandatory injury and illness prevention programs and/or mandatory health and safety committee requirements. The authors found that both types of regulations were effective in reducing injury and illness incidence rates. Three of the four states with only safety and health program requirements experienced the greatest reductions in injury and illness rates following promulgation of these mandatory program regulations.

OSHA examined the injury and illness prevention programs in eight states where the state had either required a program or provided incentives or requirements through its workers' compensation programs. The successes of these state programs, which lowered injury and illness incidences by 9 percent to more than 60 percent, are discussed below: Source: Huang et al., 2009. Data based on responses from 231 U.S. companies with 100 or more employees.

- **Alaska** had an injury and illness plan requirement for over 20 years (1973 to 1995). Five years after the program was implemented, the net decrease in injuries and illnesses (i.e., the statewide reduction in injuries and illnesses over and above the national decrease during the same time period) for Alaska was 17.4 percent.
- **California** began to require an injury and illness prevention program in 1991. Five years after this requirement began, California had a net decrease in injuries and illnesses of 19 percent.
- **Colorado** has a program that allows firms to adopt basic injury and illness prevention program components in return for a workers' compensation premium reduction. The cumulative annual reduction in accidents was 23 percent and the cumulative reduction in accident costs was between 58 and 62 percent.
- **Hawaii** began to require employers to have injury and illness prevention programs in 1985. The net reduction in injuries and illnesses was 20.7 percent.
- **Massachusetts** Workers' Compensation program firms receive a premium credit for enrolling in a loss management program. In the first year of this program, firms participating in the program had a 20.8 percent improvement in their loss ratios.
- **North Dakota** has a program under its workers' compensation program for employers who have a risk management program. The incentive is a 5 percent discount on annual workers' compensation premiums. These risk management programs contain many of the elements of an injury and illness prevention program. They resulted in a cumulative decline for serious injuries of 38 percent over a four-year period.
- **Texas** had a program under its workers' compensation commission from 1991 to 2005 which identified the most hazardous workplaces. Those employers were required to develop and implement injury and illness prevention programs. The reduction in injuries, over a four-year period (1992-1995), averaged 63 percent each year.
- **Washington** began requiring establishments to have injury and illness prevention programs in 1973. Five years later the net decrease in injuries and illnesses was 9.4 percent.

OSHA also examined fatality rates and found that California, Hawaii and Washington, with their mandatory injury and illness prevention program requirements, had workplace fatality rates as much as 31 percent below the national average in 2009.

Liu et al. (2008) examined the effectiveness of Pennsylvania's voluntary program that provides workers' compensation premium discounts to employers that establish joint labor-management safety committees. These committees are responsible for implementing several injury and illness prevention program elements: hazard identification, workplace inspection and safety management. The authors found that among program participants there was a strong association between improved injury and illness experience and the level of compliance with the program requirements. This is further evidence that programs with strong management commitment and active worker participation are effective in reducing injury risk, while "paper" programs are, not surprisingly, ineffective.

The literature on injury and illness prevention programs also includes numerous studies that attempt to identify the critical success features associated with superior health and safety performance. Gallagher (2001) concludes that management commitment and employee involvement are the keys to program success: "[R]ecurring findings

> There are many benefits from developing a safety culture at your company - none of which is more valuable than employee loyalty. When employees know you care about their personal well-being and you prove that to them in their workplace, it increases morale, engagement, awareness, motivation and productivity."

across these studies were the critical role played by senior managers in successful health and safety management systems, and the importance of effective communication, employee involvement and consultation."

– Daniel R. Nobbe, Plant Leader, Fiberteq LLC, Danville, IL.

Source: National Safety Council.

Worker participation, a fundamental element of injury and illness prevention programs, makes an important contribution to an employer's bottom line. When workers are encouraged to offer their ideas and they see their contributions being taken seriously, they tend to be more satisfied and more productive (Huang et al., 2006). Engaging employees in dialogue with management and each other about safety and health can lead to improved relationships and better overall communication, along with reduced injury rates. Improved employee morale and satisfaction translates to greater loyalty, lower absenteeism and higher productivity.

This body of research, combined with studies of individual companies (see boxes, below, with Case Studies of Programs Implemented under OSHA's Voluntary Protection Program (VPP) and Safety and Health Achievement Recognition Program (SHARP)) demonstrate clearly that injury and illness prevention programs are effective at the establishment level in dramatically reducing risk of workplace injury. This effect has also been detected in state-wide comparisons.

Based on its review of the literature on the effectiveness of these programs and on the experience of the states that have implemented injury and illness prevention program requirements, OSHA estimates that implementation of injury and illness prevention programs will reduce injuries by 15 percent to 35 percent for employers who do not now have safety and health programs. At the 15 percent program effectiveness level, this saves $9 billion per year in workers' compensation costs; at the 35 percent effectiveness level the savings are $23 billion per year.4 In addition to these workers' compensation savings, employers could also save indirect costs incurred when an employee is injured or ill. Beyond the monetized benefits of injuries and illnesses averted, and lives saved, nonmonetized costs of workplace injuries and deaths include uncompensated lost wages, the loss of human capital assets, the loss of productivity, the cost of other government benefits required by injured workers or their survivors, the loss of government tax revenues, other business expenses, and other losses not compensated by workers' compensation or other insurance.

How Widespread are Injury and Illness Prevention Programs?

Employers across the United States have implemented injury and illness prevention programs, and many jurisdictions, in the United States and abroad, currently require or encourage implementation of these programs. Currently, 34 U.S. states have established laws or regulations designed to require or encourage injury and illness prevention programs, including 15 states with mandatory regulations for all or some employers.5 Other states, while not requiring programs, have created financial incentives for employers to implement injury and illness prevention programs. In some instances this involves providing – or facilitating – workers' compensation insurance premium reductions for employers who establish programs meeting specified requirements. And 16 states, in all three of these groups, provide an array of voluntary guidance, consultation and training programs, and other assistance aimed at helping and encouraging employers to implement injury and illness prevention programs. Depending on the state, these programs apply to all employers, employers above or below a certain size threshold, employers with injury and illness rates above industry average, employers in "high-hazard" industries or employers with above-average workers' compensation experience modification rates.

Photo: Elena Finizio, Braintree, MA Area Office

Summary of Existing State Programs

State	Mandatory Regulation	Mandatory Safety Committees	Consulting or Recognition	Insurance Premium Reductions	If mandatory, who is covered?a
Alabama					All employers
Arkansas					"Hazardous" employers
California					All employers
Colorado					
Connecticut					Employers with >25 employees "Hazardous" small employers
Delaware					
Hawaii					All employers
Idaho					
Indiana					
Kansas					
Louisiana					Employers with >15 employees
Michigan					Employers in construction industry
Minnesota					Employers with >25 employees

					Committees required for "Hazardous" employers
Missouri					All employers
Mississippi					
Montana					Employers with > 5 employees
North Carolina					"Hazardous" employers Committees required for employers with >5 employees
North Dakota					
Nebraska					All employers
New Hampshire					Employers with >10 employees Committees required for employers with >5 employees
New Mexico					
Nevada					Employers with >10 employees Committees required for employers with >25 employees
New York					Employers with payroll >$800K Other "hazardous" employers
Ohio					
Oklahoma					
Oregon					All construction employers All other employers with >10 employees (except logging and agriculture)
Pennsylvania					
Tennessee					"Hazardous" employers
Texas					
Utah					"Hazardous" employers
Vermont					"Hazardous" employers
Washington					All employers
West Virginia					"Hazardous" employers
Wyoming					

a States define "hazardous" employers individually, using criteria such as above-average injury incidence rates for their industry or above-average workers' compensation claim experience.
Source: OSHA Directorate of Standards and Guidance.

The more than 2,400 establishments that belong to OSHA's Voluntary Protection Program have programs that are based on the same core elements found in the injury and illness prevention program that OSHA will be proposing. The same is true for OSHA's Safety and Health Achievement Recognition Program, in which more than 1,500 smaller employers are enrolled. Each year, dozens of organizations seeking international recognition for their safety and health program proudly submit applications to the National Safety Council for the Robert W. Campbell award (see text box). Case studies of past winners are available on the Campbell Award website.

Recognizing Business Excellence in Safety and Health

The Robert W. Campbell Award recognizes organizations that achieve business excellence by integrating environmental, health and safety (EHS) management into their business operating systems. The Award aims to:

- Recognize businesses that uphold EHS as a key business value and link measurable achievement in EHS performance to productivity and profitability.
- Establish a validated process by which industries can measure the performance of their EHS operations system against well-tested and internationally accepted key performance indicators.
- Use a rigorous systematic review process to capture and evaluate the successes and lessons learned.
- Share leading edge EHS management systems and best practices for educational purposes worldwide.

The Award program is supported by a network of 22 Global Partners across five continents committed to promoting EHS as an integral component of business management worldwide.

Source: www.campbellaward.org.

There are at least two industry consensus standards for injury and illness prevention programs. The American National Standards Institute (ANSI) and American Industrial Hygiene Association (AIHA) have published a voluntary consensus standard, ANSI/AIHA Z10 – 2005 *Occupational Safety and Health Management Systems* (ANSI/AIHA, 2005). The Occupational Health and Safety Assessment Series (OHSAS) Project Group, a consortium of selected Registrars, national standards bodies, professional associations and research institutes, has produced a similar document, OHSAS 18001 – 2007 Occupational Health and Safety Management Systems (OHSAS Project Group, 2007). These consensus-based standards have been widely accepted in the world of commerce and adopted by many businesses on a voluntary basis.

Canada, Australia and all members of the European Union operate programs that either require employers to adopt injury and illness prevention programs, or provide incentives or recognition to those who do so. For example, under the 1989 EU Framework Directive (89/391), EU member countries must have national legislation in place requiring employers to maintain risk identification and prevention programs that are very similar to OSHA's injury and illness prevention program concept (European Union, 1989). U.S. companies operating internationally are familiar with these requirements and have already put in place their own programs to meet these requirements. Finally, many private workers' compensation carriers offer incentives to employers who have injury and illness prevention programs and provide technical assistance to help them implement their programs.

The United States Departments of Defense (DOD) and Energy (DOE) have both adopted this approach for protecting workers employed or stationed at the nation's military installations and nuclear weapons factories, including DOE's high hazard establishments. The success of DOD's program is described in the box below. DOE's program, entitled Integrated Safety Management, includes an expectation that the facilities will "embrace a strong safety culture where safe performance of work and involvement of workers in all aspects of work performance are core values that are deeply, strongly, and consistently held by managers and workers." According to DOE, the aspects of this safety culture that impact safety performance are Leadership, Employee/Worker Involvement and Organizational Learning (DOE, 2011).

Photo: Frank Wenzel, Washington DOSH

Despite the value to employers and workers in terms of injuries prevented and dollars saved, many U.S. workplaces have not yet adopted injury and illness prevention programs. Based on the positive experience of employers with existing programs, OSHA believes that injury and illness prevention programs provide the foundation for breakthrough changes in the way employers identify and control hazards, leading to significantly improved workplace health and safety environments. Adoption of injury and illness prevention program will result in workers suffering fewer injuries, illnesses and fatalities. In addition, employers will improve their compliance with existing regulations, and will experience many of the financial benefits of a safer and healthier workplace described in the literature and in reports by individual companies.

The Department of Defense Embraces Injury and Illness Prevention Programs

DOD is committed to keeping workers safe from preventable injuries, and has embraced the safety and health management system approach through its participation in OSHA's Voluntary Protection Programs (VPP). The leaders of our armed forces understand that employees are critical to mission readiness, and recognize the link between lost time injuries and illnesses and lost productivity. The Secretary of Defense has set a goal of reducing preventable injuries by 75 percent from a 2002 baseline, with the ultimate aim of achieving zero injuries. VPP participation has proven a powerful tool in this effort.* The 2009 DOD Safety Perception Survey of Senior Leaders captured many positive comments on VPP Successes. According to the head of the Defense Safety Oversight Council (DSOC), which manages DOD's VPP Program, DOD saw a lost day rate reduction of 41 percent, from 31.5 per 100 full-time workers in FY 2002 (before any VPP programs were implemented) to 18.7 per 100 workers in FY 2009. DSOC publishes a list of the "Top 40" installations with the highest lost day rates. One installation that ranked among the highest of these dropped to one of the lowest in under two years through implementation of VPP. The chart below illustrates some of the dramatic improvements in service-wide injury and illness rate performance, comparing data from before and after VPP participation.

VPP Implementation Impacts on Service-Wide Lost Day Rates (per 100 workers)

	FY 02	FY 09	Rate Reduction	Percent Improvement
All DOD	31.5	18.7	12.8	41%
Army	29.3	17.8	11.5	39%
Navy	39.8	21.2	18.6	46%
Marines	73.8	36.7	37.1	50%
Air Force	25.6	16.5	9.1	36%
Defense Logistics	25.6	16.9	8.7	34%

Source: Angello, 2010.

* As of November 30, 2011 there were 39 DOD sites in VPP and approximately 200 additional sites working

towards VPP status (Source: OSHA Directorate of Cooperative and State Programs, 2011).

Case Studies of Programs Implemented under OSHA's Voluntary Protection Program (VPP)

- Hypotherm is a 900-employee, New Hampshire-based manufacturer of high-tech plasma and laser-cutting tools and machines. The company provides an extensive employee training program that emphasizes health and safety as part of an overall focus on quality. Through this investment the firm's highly skilled, safety-oriented workforce has driven a 25 percent reduction in costly machine crashes and down time, and over a 3-year period (2007-2010), the company's workers' compensation costs have fallen by 90 percent. Hypotherm has consistently been named a "Best Place to Work" in the state of New Hampshire and plans to add 100 positions over the next year.
- Allegheny Energy's LM6000 Group operates three combustion turbine facilities in southwestern Pennsylvania. Facing complaints about the use of arc flash hoods required for certain operations (fogging, visibility), the company asked a group of employees to investigate alternatives. The employees identified, evaluated and recommended a power ventilated hood, which the company then purchased. In another case, employees were provided time and resources to identify a way to incorporate fall protection in one particular area. The employees found several locations where vertical lifeline systems could be safely installed and used, and a vendor was brought in to assist with the installation. Involving employees and giving them a role in finding solutions has helped Allegheny Energy foster a culture of safety and remain incident-free since the group began operation.
- Pittsburgh-based McConway & Torley has been producing steel castings, rail couplings, and car-connecting systems for the railroad industry since 1868. The company believes it has the best foundry workers in the world, but also realized that its compliance-focused approach to safety was not enough to prevent workers from getting injured. Working with OSHA, the company began filling gaps in its injury and illness prevention program by following the VPP model. During the process of implementing the VPP program at its two foundries, managers and workers discovered that the required high level of employee involvement really made a difference. With top management's full commitment and support, foundry managers and employees work together to proactively resolve safety issues like repetitive motion problems, to improve work practices and to develop job safety analyses. Employees participate in monthly safety audits, facility-wide inspections, accident investigations and self assessments, and are actively involved in conducting safety training. They feel free to submit ideas for safety improvements – and then they help implement those improvements, a degree of empowerment that continues to make a difference in injury reduction and a safer workplace. The impact of the VPP program was powerful: between 2006 and 2010, McConway & Torley was able to reduce workers' compensation cases in its facilities by 79 percent and reduce related direct costs by 90 percent.

Source: OSHA Directorate of Cooperative and State Programs.

Are Injury and Illness Prevention Programs Too Complicated and Expensive for Small Businesses?

For many small businesses, establishing an injury and illness prevention program may seem daunting. Any program based on formal structures can be difficult to establish in a small organization because of tight budgets. Yet simple, low-cost approaches have been shown to be effective in small businesses (Hasle and Limborg, 2006). Injury and illness prevention programs lend themselves to such low-cost approaches because they are highly flexible – the core elements can be implemented at a basic level suitable for the smallest business, as well as at a more advanced, structured level that may be needed in a larger, more complex organization.

OSHA's Safety and Health Achievement Recognition Program (SHARP), which recognizes small employers that operate exemplary injury and illness prevention programs, provides compelling evidence that such programs can and do work for small businesses. For example, the Ohio Bureau of Workers' Compensation (2011) analyzed the policies of 16 SHARP employers over a 12-year period from 1999 to 2010. The study compared the employers' experience prior to and after achieving entry into the SHARP program. The preliminary results of the study show that the average number of claims for these employers decreased by 52 percent, the average claim cost decreased by 80 percent, the average lost time per claim decreased by 87 percent, and claims (per million dollars of payroll) decreased by 88 percent.

An internal OSHA study of nine SHARP firms, ranging in size from 15 to 160 employees, found that the firms achieved the following as a result of their programs:

- A reduction in the number of injuries and illnesses.
- Improved compliance with regulatory requirements.
- Improved business and cost savings including reduced workers' compensation premiums, reduced administrative and human resources burden associated with filing injury and illness reports, managing workers' compensation cases and training new employees. The companies also experienced improved efficiency in operations and material use, and improved productivity. They were able to leverage their limited health and safety resources.
- An improved workplace environment with greater collective responsibility for workplace health and safety.
- Improved reputation and image in the community including relationships and cooperation between employers and OSHA, between employers and employees, and among employers in the business community.

Small Business Program Example: Anthony Forestry Products

Anthony Forestry Products is a fourth generation, family-owned lumber and wood products company. Its laminated wood products plant in El Dorado, Arkansas employs a staff of 80. The company initiated efforts to improve its safety practices and, in 2001, began working with OSHA's On-Site Consultation Program on a voluntary basis to put in place a working safety and health management system. By 2002, the site was accepted into the SHARP. As a result of this work, the company's workers' compensation loss rate (in losses per $1,000 of payroll) decreased from $18.20 in 1998 to $0.30 in 2007.

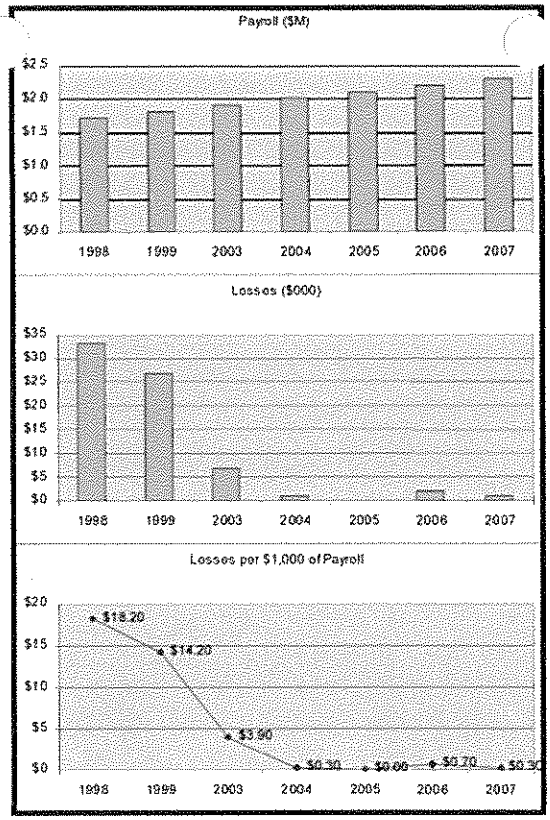

Source: ERG (2008).

Conclusions

- Despite the combined efforts of employers, workers, unions, safety professionals and regulators, more than 4,500 workers lose their lives and more than four million are seriously injured each year. Tens of thousands more die or are incapacitated because of occupational illnesses including many types of cancer and lung disease. The human toll from this loss is incalculable and the economic toll is enormous.
- Many employers in the U.S. have been slow to adopt a workplace "safety culture" that emphasizes planning and carrying out work in the safest way possible.
- Injury and illness prevention programs are based on proven managerial concepts that have been widely used in industry to bring about improvements in quality, environment and safety, and health performance. Effective injury and illness prevention programs emphasize top-level ownership of the program, participation by employees, and a "find and fix" approach to workplace hazards.
- Injury and illness prevention programs need not be resource-intensive and can be adapted to meet the needs of any size organization.

OSHA believes that adoption of injury and illness prevention programs based on simple, sound, proven principles will help millions of U.S. businesses improve their compliance with existing laws and regulations, decrease the incidence of workplace injuries and illnesses, reduce costs (including significant reductions in workers' compensation premiums) and enhance their overall business operations.

References

Alsop, P. & LeCouteur, M. (1999). Measurable success from implementing an integrated OHS management system at Manningham City Council. Journal of Occupational Health & Safety – Australia & New Zealand, 15, 565–572.

Angello, J. (2010). A journey to improved safety performance. The Leader, 19(3), 27-29.

ANSI/AIHA (2005). American National Standard – Occupational Health and Safety Management Systems. ANSI/AIHA Z10–2005

Bunn, W. B. et al. (2001). Health, safety, and productivity in a manufacturing environment. *Journal of Occupational and Environmental Medicine 43(1), 47-55.*

Bureau of Labor Statistics. (2010). Table A-1. Fatal occupational injuries by industry and event or exposure, All United States, 2010. Available at: http://www.bls.gov/iif/oshwc/cfoi/cftb0241.pdf*

Conference Board. (2003). Driving toward "0": Best practices in corporate safety and health.

DOE, (2011). U.S. Department of Energy, Office of Health, Safety and Security. A basic overview of Integrated Safety Management.

European Union, (1989). Council Directive of 12 June 1989 on the introduction of measures to encourage improvements in the safety and health of workers at work. (89/391/EEC).

Photo: Roberto Rodriguez, Mesquite, Texas

Gallagher, C. (2001). New directions: Innovative management plus safe place. In W. Pearse, C. Gallagher, & L. Bluff, (eds.) Occupational health & safety management systems: Proceedings of the first national conference (pp. 65-82).

Gallagher, C. et al. (2003). Occupational safety and health management systems in Australia: Barriers to success. *Policy and Practice in Health and Safety* 1(2), 67-81.

Hasle, P. & Limborg, H. (2006). A review of the literature on preventive occupational health and safety activities in small enterprises. *Industrial Health* 44(1), 6-12.

Huang, Y. H. et al. (2006). Safety climate and self-reported injury: Assessing the mediating role of employee safety control. *Accident Analysis and Prevention* 38(3), 425-33.

Huang, Y. H. et al. (2009). Financial decision-makers' views on safety: What SH&E professionals should know. *Professional Safety* (April), 36-42.

Leigh, J. P. et al. (1997). Occupational injury and illness in the United States: Estimates of costs, morbidity, and mortality. *Annals of Industrial Medicine* 157(14), 1557-1568.

Lewchuk, W., Robb, A., & Walters, V. (1996). The Effectiveness of Bill 70 and Joint Health and Safety Committees in Reducing Injuries in the Workplace: The Case of Ontario. *Canadian Public Policy*, 22, 225-243.

Liberty Mutual Research Institute. (2010). 2010 Liberty Mutual Workplace Safety Index.

Liu, H. et al. (2008). The Pennsylvania Certified Safety Committee Program: An Evaluation of Participation and Effects on Work Injury Rates. RAND Working Paper WR-594-PA.

National Academy of Social Insurance. (2011). Workers' Compensation: Benefits, Coverage, and Costs, 2009.

Ohio Bureau of Workers' Compensation. (2011). Ohio 21(d) SHARP Program Performance Assessment.

OHSAS Project Group. (2007). Occupational health and safety management systems – Requirements. OHSAS 18001:2007. Published as a British Standards Institute standard.

Shannon, H. et al. (1996). Workplace organizational correlates of lost-time accident rates in manufacturing. *American Journal of Industrial Medicine*, 29(3), 258-268.

Shannon, H. et al. (1997). Overview of the relationship between organizational and workplace factors and injury rates. *Safety Science*, 26, 201-217.

Smitha, M.W. et al. (2001). Effect of state workplace safety laws on occupational injury rates. *Journal of Occupational and Environmental Medicine*, 43(12), 1001-1010.

Stanford University. (1981). Improving construction safety performance: The user's role (Technical report No. 260). Department of Civil Engineering.

Steenland, K. et al. (2003). Dying for Work: The Magnitude of US Mortality from Selected Causes of Death Associated with Occupation. *American Journal of Industrial Medicine*, 43, 461-482.

Torp, S. et al. (2000). Systematic health, environment, and safety activities: Do they influence occupational environment, behavior and health? *Occupational Medicine*, 50(5), 326-333.

U.S. Department of Energy, Office of Corporate Safety Analysis. (2009a). Occupational Medicine Newsletter. Corporate safety: Health & safety is working!

U.S. Department of Energy, Office of Health, Safety and Security (HSS). (2009b). A basic overview of the worker safety and health program (10 CFR 851). Outreach & Awareness Series to Advance DOE Mission.

Viscusi, W. & Aldy, J. (2003). The value of a statistical life: A critical review of market estimates throughout the world. *Journal of Risk and Uncertainty*, 27, 5-76.

Yassi, A. (1998). Utilizing Data Systems to Develop and Monitor Occupational Health Programs in a Large Canadian Hospital. *Methods of Information and Medicine*, 37, 125-129.

Footnotes:

Footnote 1: The occupational safety and health community uses various names to describe systematic approaches to reducing injuries and illnesses in the workplace. Consensus and international standards use the term Occupational Health and Safety Management Systems; OSHA currently uses the term Injury and Illness Prevention Programs and others use Safety and Health Programs to describe these types of systems. Regardless of the title, they all systematically address workplace safety and health hazards on an ongoing basis to reduce the extent and severity of work-related injuries and illnesses.

Footnote 2: The "most disabling" injuries are defined by Liberty Mutual as those causing the injured employee to miss six or more days from work.

Footnote 3: For more details see OSHA's Safety and Health Management Systems eTool, available at www.osha.gov/SLTC/etools/safetyhealth/mod1_costs.html.

Footnote 4: If injury and illness prevention programs achieve a 15 percent reduction in injuries and illnesses for employers who do not currently have safety and health programs, the overall reduction in injuries and illnesses for all employers including those that already have programs is estimated at 12.4 percent. Applying this 12.4 percent to NASI's estimate of the $74 billion in direct workers' compensation costs in 2009, workers' compensation savings could be as high as $9 billion per year. With a 35 percent program effectiveness, the overall reduction in injuries and illnesses for all employers is estimated at 30.8 percent and workers' compensation savings could reach $23 billion per year.

Footnote 5: The 15 states are: Arkansas, California, Hawaii, Louisiana, Michigan, Minnesota, Mississippi, Montana, North Carolina, New Hampshire, Nevada, New York, Oregon, Utah, and Washington.

* **Accessibility Assistance**: Contact OSHA's Office of Communications at 202-693-1999 for assistance accessing PDF documents.

U.S. Department of Labor | Occupational Safety & Health Administration | 200 Constitution Ave., NW, Washington, DC 20210
Telephone: 800-321-OSHA (6742) | TTY
www.OSHA.gov

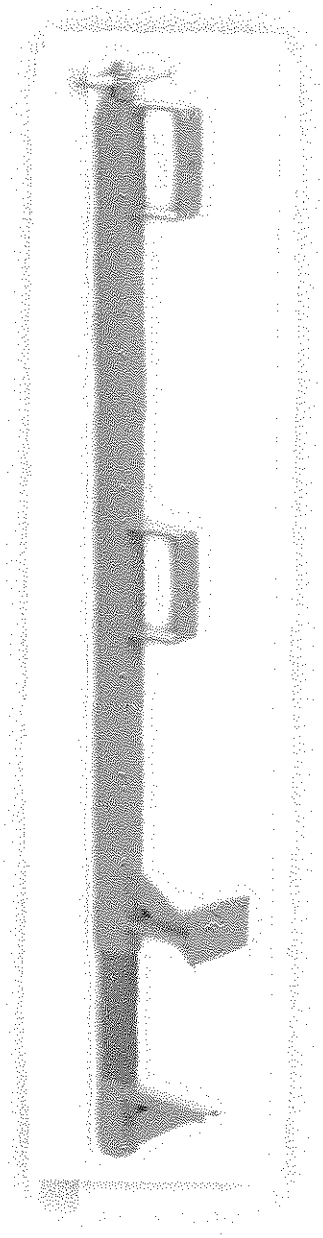

SLAB GRABBER

Number of fatal work injuries, 1992–2012*

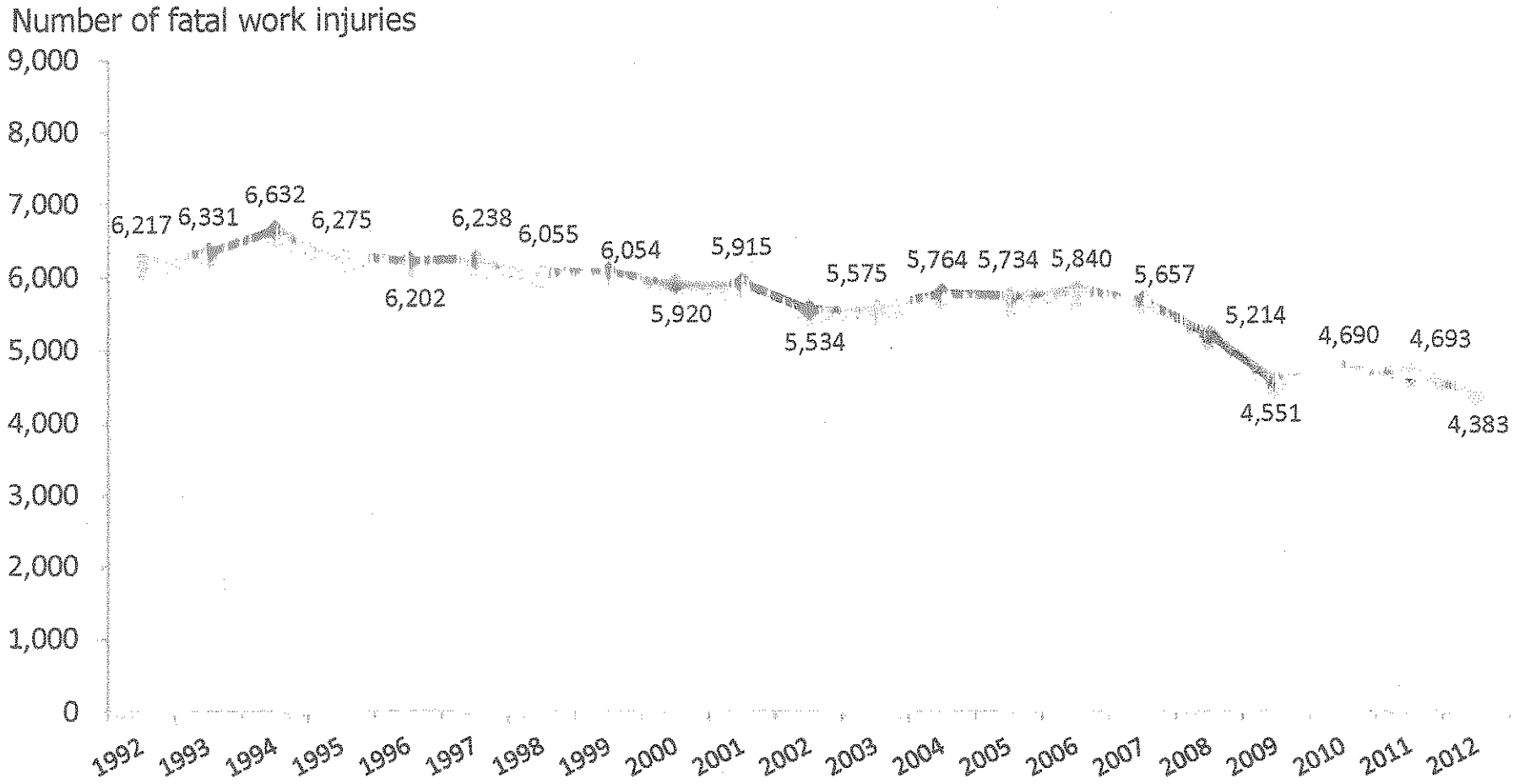

The 2012 preliminary total of 4,383 fatal work injuries represents a decrease of 7 percent from the final count of 4,693 fatal work injuries reported for 2011.

*Data for 2012 are preliminary. Data for prior years are revised and final.
NOTE: Data from 2001 exclude fatal work injuries resulting from the September 11 terrorist attacks.
SOURCE: U.S. Bureau of Labor Statistics, U.S. Department of Labor, 2013.

Rate of fatal work injuries, 2006–2012*

The preliminary rate of fatal work injuries in 2012 was 3.2 fatal work injuries per 100,000 full-time equivalent workers, down from the final 2011 rate of 3.5.

*Data for 2012 are preliminary. Data for prior years are revised and final.
NOTE: Rate = (Fatal work injuries/Total hours worked by all workers) x 200,000,000 where 200,000,000 = base for 100,000 full-time equivalent workers (FTEs) working 40 hours per week, 50 weeks per year. The total hours worked figures are annual average estimates of total at work multiplied by average hours for civilians, 16 years of age and older, from the Current Population Survey (CPS).
In 2008, CFOI implemented a new methodology, using hours worked for fatal work injury rate calculations rather than employment. For additional information on the fatal work injury rate methodology, please see http://www.bls.gov/iif/oshnotice10.htm.
SOURCE: U.S. Bureau of Labor Statistics, U.S. Department of Labor, Current Population Survey, Census of Fatal Occupational Injuries, and U.S. Census Bureau, 2013.

Fatal falls to lower level by height of fall, 2012*

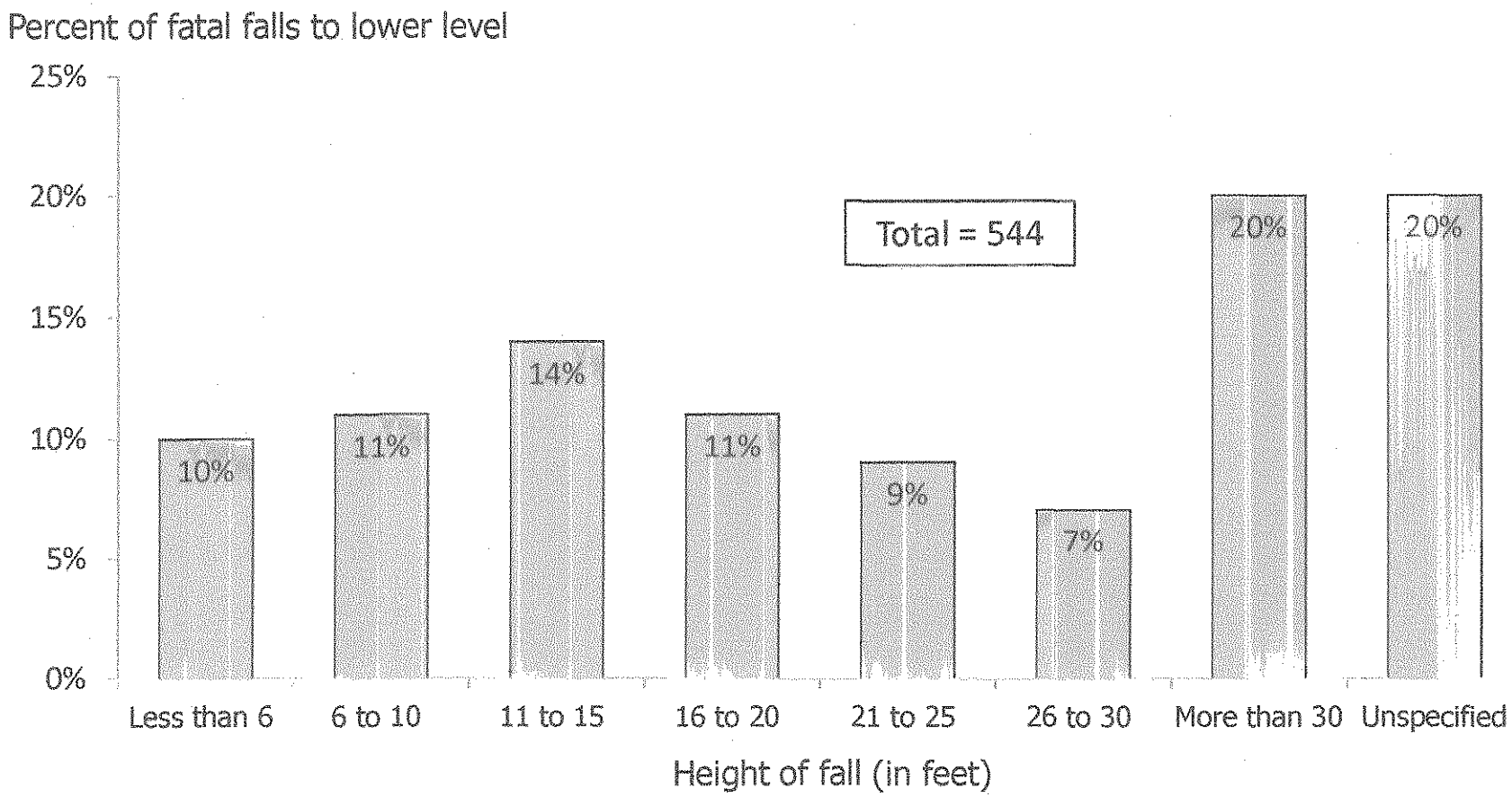

In 2012, falls to lower level accounted for 544 fatal work injuries. Forty-five percent of falls to lower level involved falls of 20 feet or less. Another 20 percent of cases involved falls from more than 30 feet.

*Data for 2012 are preliminary.
NOTE: Reference year 2011 constitutes a series break from earlier years for event data. For more information, see http://www.bls.gov/iif/osh_notice11.htm.
Percentages may not add to 100 due to rounding.
SOURCE: U.S. Bureau of Labor Statistics, U.S. Department of Labor, 2013.

Number and rate of fatal occupational injuries, by industry sector, 2012*

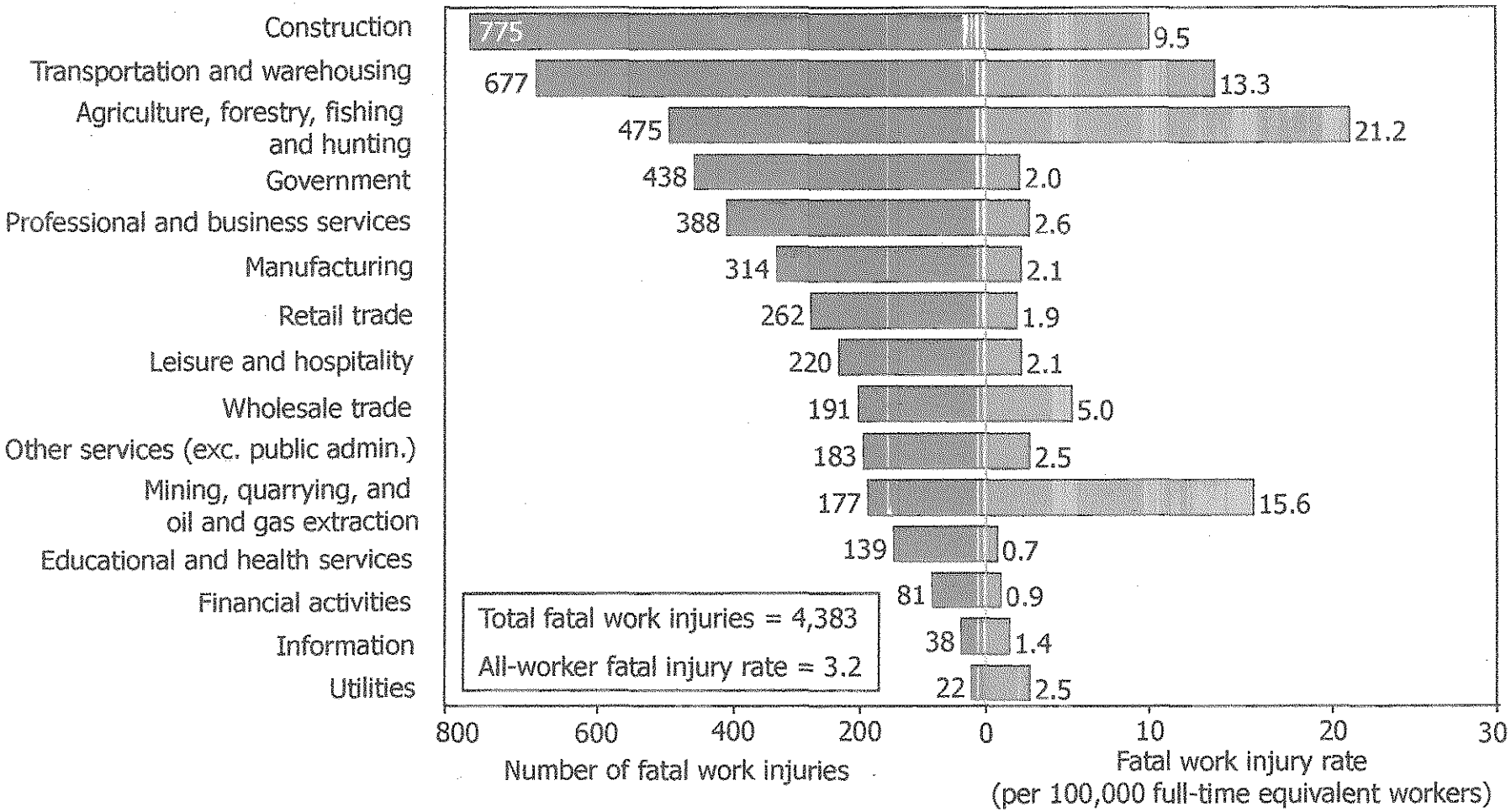

Construction had the highest preliminary count of fatal injuries in 2012, but the agriculture, forestry, fishing and hunting sector had the highest fatal work injury rate.

*Data for 2012 are preliminary.
NOTE: All industries shown are private with the exception of government, which includes fatal injuries to workers employed by governmental organizations regardless of industry. Fatal injury rates exclude workers under the age of 16 years, volunteers, and resident military. The number of fatal work injuries represents total published fatal injuries before the exclusions. For additional information on the fatal work injury rate methodology, please see http://www.bls.gov/iif/oshnotice10.htm.
SOURCE: U.S. Bureau of Labor Statistics, U.S. Department of Labor, 2013.

Fatal work injuries, by industry and contractor-adjusted industry[1], by selected industries, 2012*

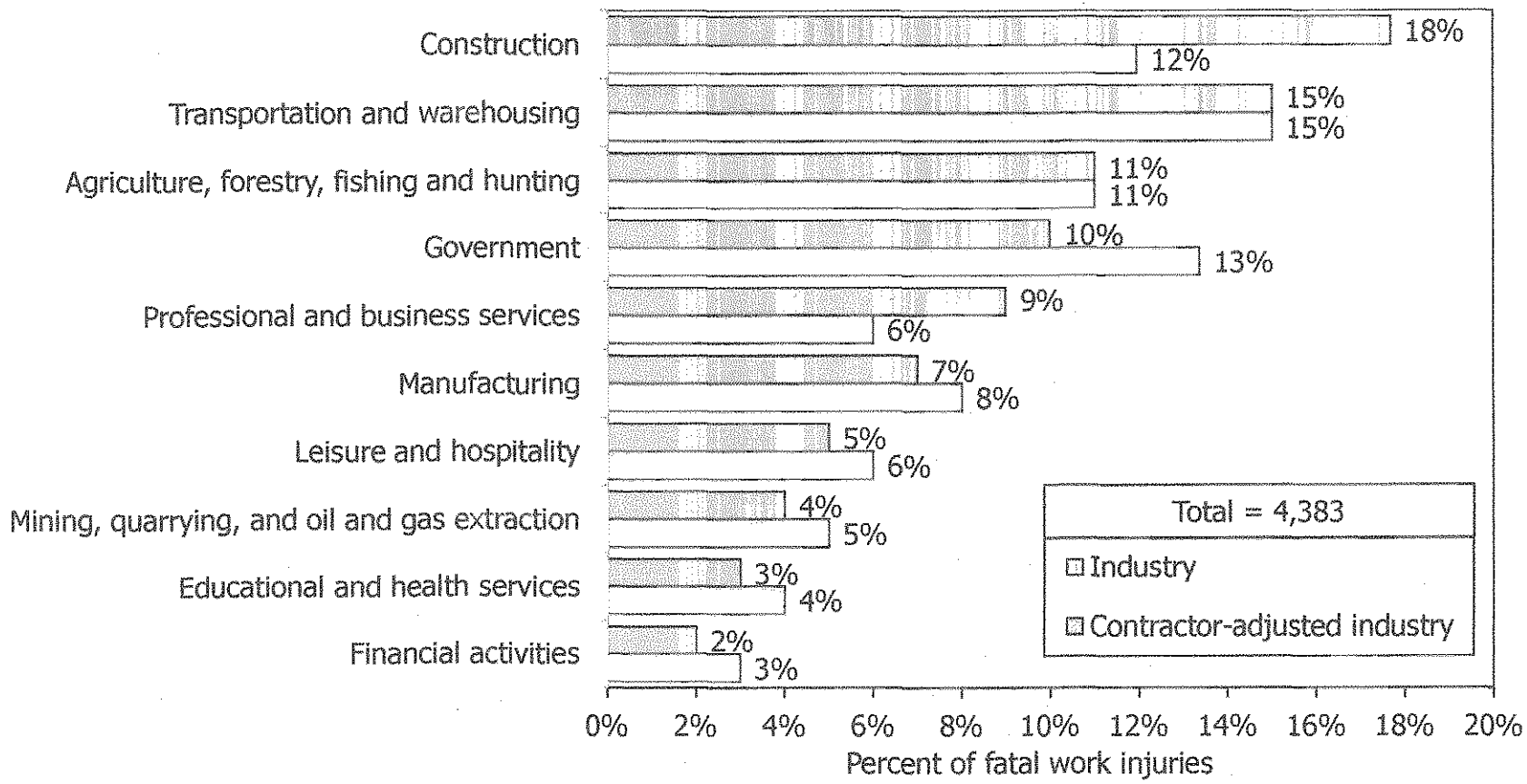

Sixteen percent of all fatal work injuries in 2012 involved contractors. One third of those who died while employed in the construction industry were actually contracted to another industry, such as government or real estate, when the fatal injury occurred.

*Data for 2012 are preliminary.

[1] Contractor-adjusted industry is the industry of the entity that had overall responsibility for the operations at the site where the worker was fatally injured.

NOTE: In 2011, the CFOI program began collecting contractor data to capture decedents who were working as contractors at the time of the fatal incident. All industries shown are private with the exception of government, which includes fatal injuries to workers contracted by governmental organizations regardless of industry.

See http://www.bls.gov/iif/oshcfdef.htm for more information. Percentages may not add to 100 due to rounding.

SOURCE: U.S. Bureau of Labor Statistics, U.S. Department of Labor, 2013.

Percentage change of fatal work injuries, from industry to contractor-adjusted industry[1], by selected industries, 2012*

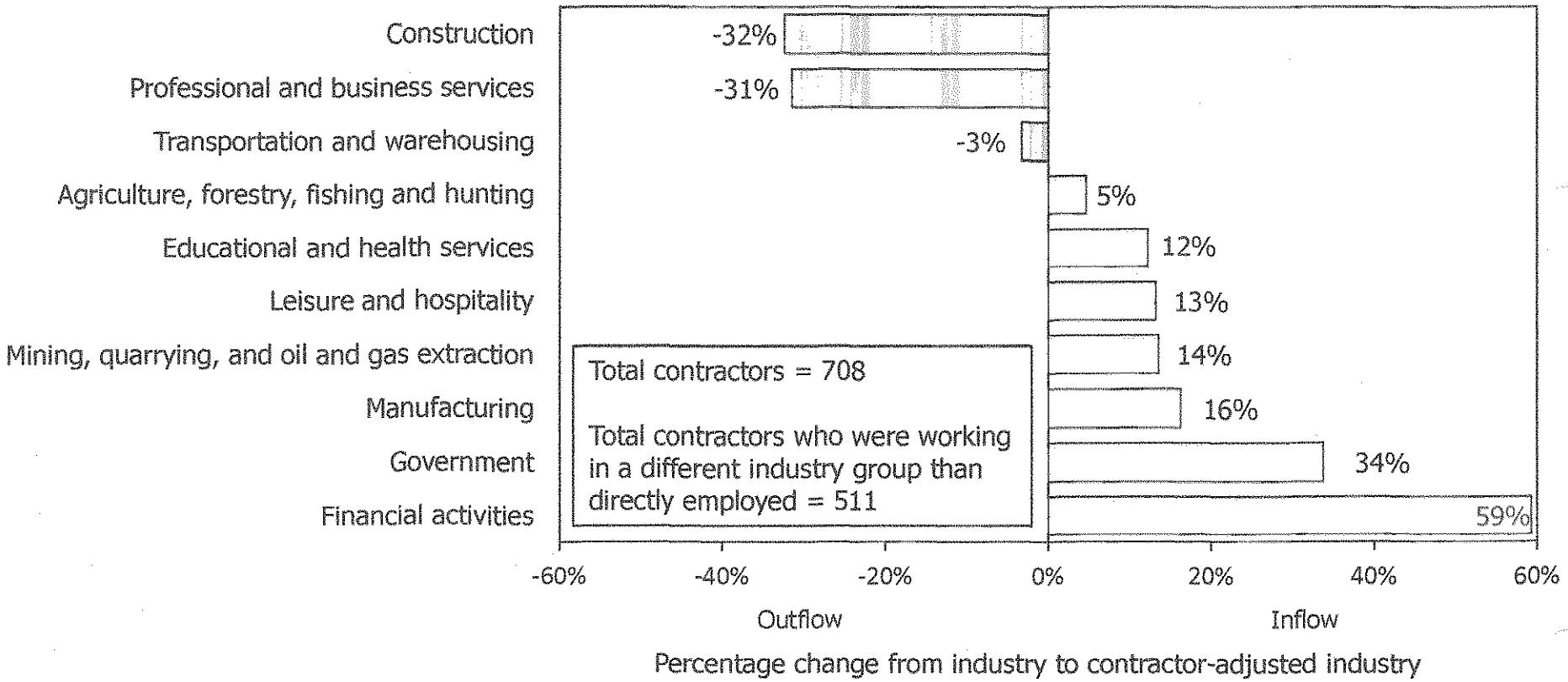

Three industry groups, construction, professional and business services, and transportation and warehousing, were net providers of contract workers. All other industry groups were net receivers. Fatal injuries in government increased by one third, and those in financial activities by 59 percent, when workers contracted into the industry were included.

*Data for 2012 are preliminary.

[1] Contractor-adjusted industry is the industry of the entity that had overall responsibility for the operations at the site where the worker was fatally injured.

NOTE: In 2011, the CFOI program began collecting contractor data to capture decedents who were working as contractors at the time of the fatal incident. All industries shown are private with the exception of government, which includes fatal injuries to workers contracted by governmental organizations regardless of industry.

See http://www.bls.gov/iif/oshcfdef.htm for more information.

SOURCE: U.S. Bureau of Labor Statistics, U.S. Department of Labor, 2013.

Number of fatal work injuries, by state, 2012*

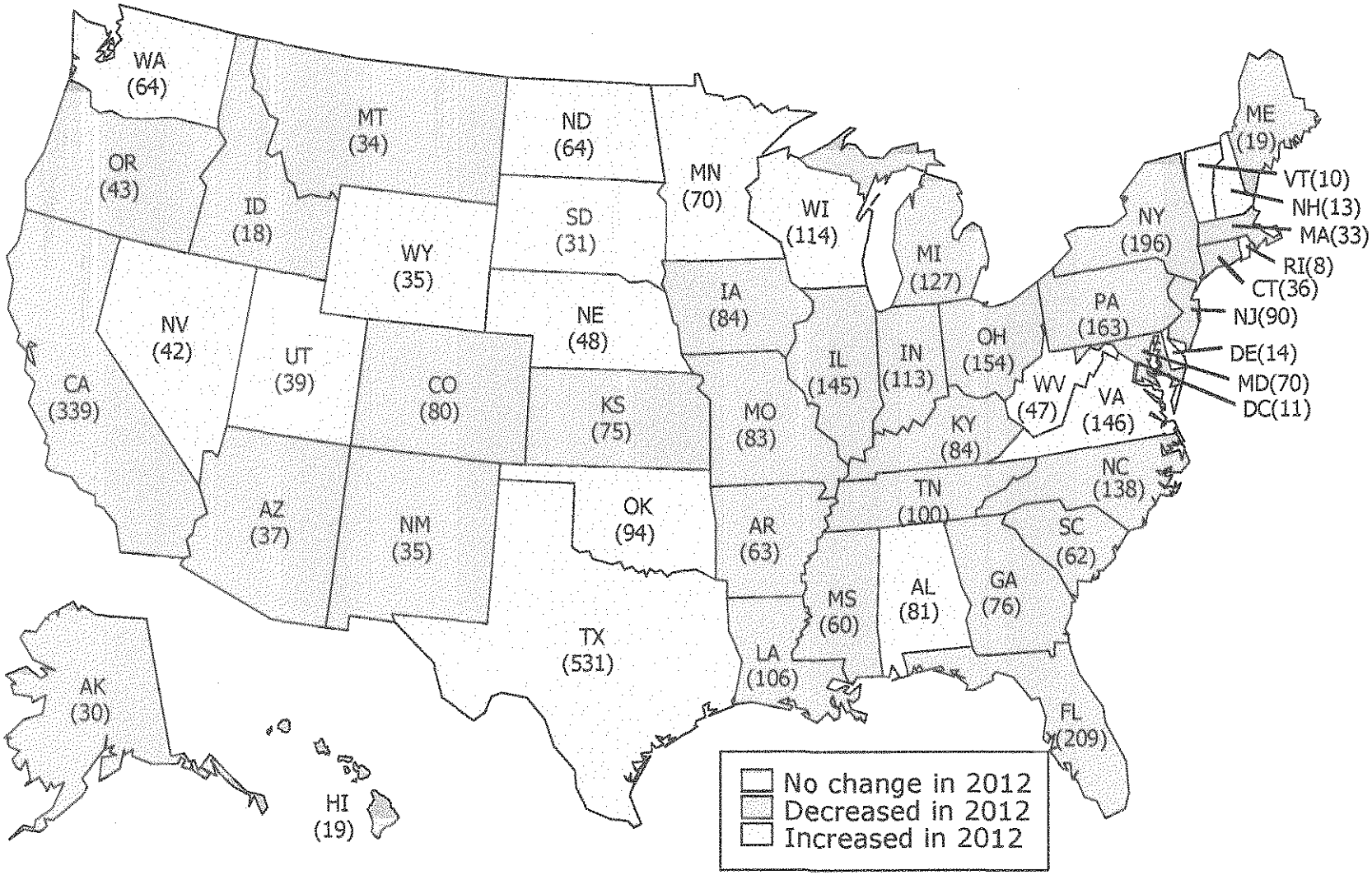

Sixteen states and the District of Columbia had preliminary counts showing more fatal injuries in 2012 than in 2011. Thirty-two states had fewer fatal workplace injuries in 2012 compared to 2011. Two states saw no change between the two years.

*Data for 2012 are preliminary.
SOURCE: U.S. Bureau of Labor Statistics, U.S. Department of Labor, 2013.

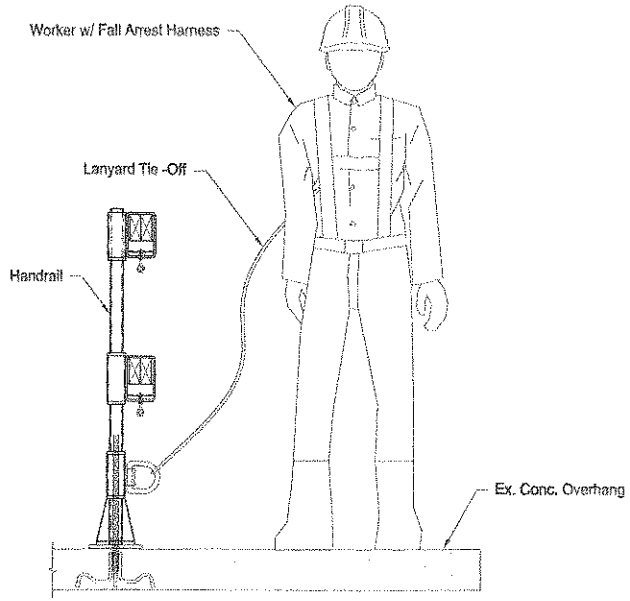

1 / 01 Overall Handrail Elevation
Scale: 3/4" = 1'-0"

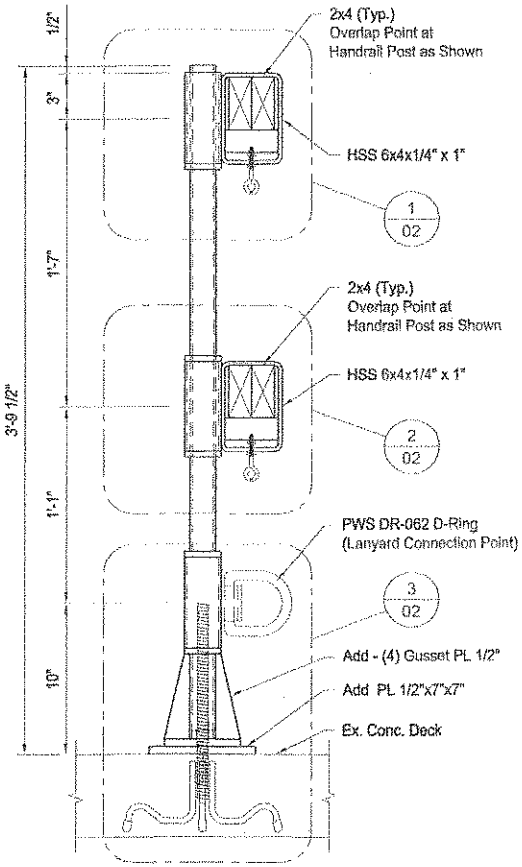

2 / 01 Typical Handrail Section View
Scale: 1 1/2" = 1'-0"

GENERAL NOTES:

1. Pipe Shall be ASTM A53 Gr.B. Tube Steel Shall be ASTM A500 Gr.B, Fy=46 ksi. All structural steel shall be ASTM A36 U.N.O.
2. All structural steel shall be detailed as per AISC standards. Member sizes shown are minimum required. Equivalent or larger members may be substituted with prior approval from VAK.
3. All welding to be done with E70 electrodes in conformance with American Welding Society (AWS) "Structural Welding Code" AWS D1.1 current edition.
4. Life line designed to support (1) worker equipped with a shock absorbing lanyard which limits fall arrest force to 1,000 lbs. for worker.
5. Contractor shall ensure adequate vertical clearance from ground, or other impact point, for fall arrest system to take up life line deflection, lanyard, lanyard elongation, and worker height.
6. Coil rod shall be Williams 3/4"Ø B7S or equal with matching heavy hex nut welded continuously to 5" X 5" X 1/2" plate. The Coil rod shall be installed into the B-75 Wall brace with full engagement per manufactures requirements.
7. Meadow Burke B-75 Wall Brace Inserts (Item Number 251EE003) shall be used and installed prior to placing concrete, and concrete minimum strength at time of handrail use shall be 2500 psi.
8. 5/8" D-Ring Assembly with weld on clips and a WLL of 6,000-lb shall be used (Pacific Western Sales; Item # PWS DR-062)
9. Design Loads:
   Guardrail = 200-lb. ultimate load
   Maximum Fall Arrest Force at Tie-Off point: 1000 lb;
   5:1 Safety Factor
10. Design References:
   AISC Manual of Steel Construction, ASD
   29 CFR 1926.502 OSHA Fall Protection Systems

5/14/13
REGISTERED PROFESSIONAL ENGINEER
NELLO A. ACII
No. C037724
EXP. 12/13
CIVIL
STATE OF CALIFORNIA

0	Issued for Approval	JRS	[illegible]	VAK
No.	REVISIONS	By	DATE	CHKD

VAK Construction Engineering Services, LLC
[illegible] SW Nimbus Avenue, Suite 101
Beaverton, Oregon 97008
503.718.[illegible] tel 503.718.[illegible] fax
www.vakengineering.com

SAP HANDRAIL
Handrail Evaluation
Elevation and Typical Section View

Drawn by	Date	Designed	Checked by	Scale	Project number	Rev
JRS	[illegible]	VAK	VAK	AS NOTED	13-060A-01	0

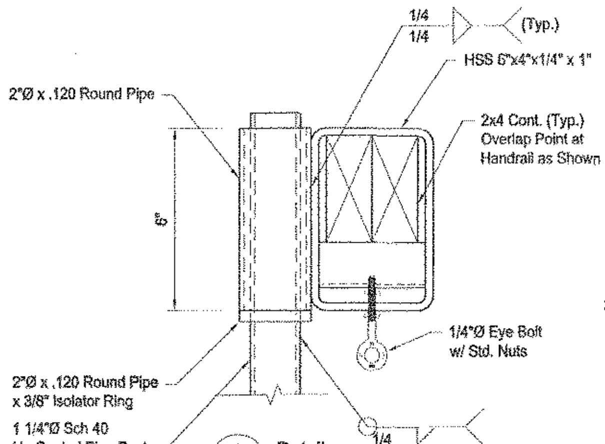

1 / 02 Detail
Scale: 3" = 1'-0"

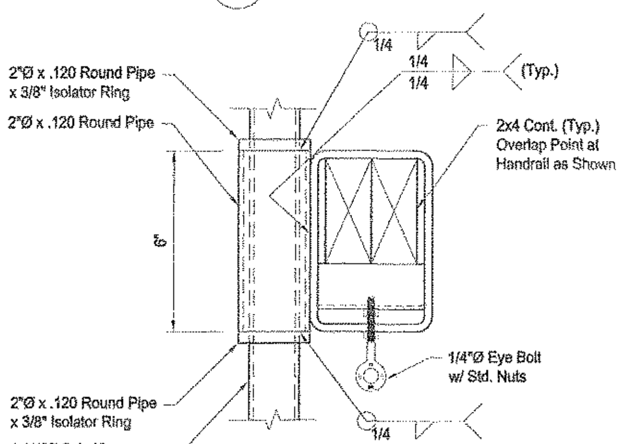

2 / 02 Detail
Scale: 3" = 1'-0"

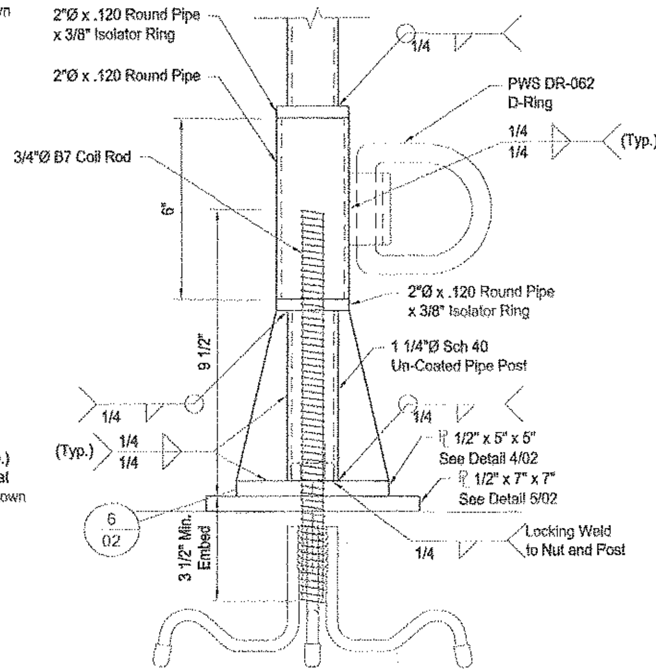

3 / 02 Detail
Scale: 3" = 1'-0"

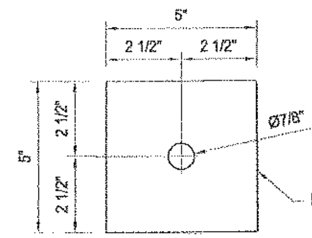

4 / 02 PL Detail
Scale: 3" = 1'-0"

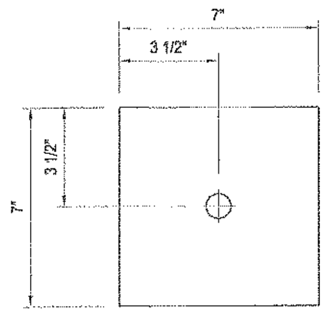

5 / 02 PL Detail
Scale: 3" = 1'-0"

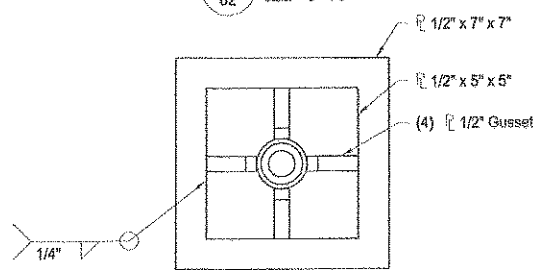

6 / 02 PL Detail
Scale: 3" = 1'-0"

Registered Professional Engineer
Vello A. Kot
No. C039724
Exp. 12/13
Civil
5/14/13

VAK Construction Engineering Services, LLC
503.718.5859 tel
www.vakengineering.com

SAP HANDRAIL
Handrail Evaluation
Details

AS NOTED
13-080A-02
0

United States Patent **8,656,652**
Carrillo **February 25, 2014**

Safety anchor post system

Abstract

A safety anchor post system mountable to a pre-set anchor embedded in concrete for protecting a user from falling while working in precarious areas is provided. The system comprises a tubular post having a first end and a second end with a coil rod extending from the tubular post. A first sleeve is mounted at the second end of the post. A second sleeve is mounted between the first sleeve and the first end of the post with at least one rail member receivable within each sleeve. A clamping mechanism tightens against the rail members to releasably maintain the at least one rail member within each sleeve. A tie off device is mounted to the post. Upon releasably securing the at least one rail member within each sleeve and tying off to the tie off device, a worker is inhibited from falling from the support structure.

Inventors: **Carrillo; Jose M.** (Elk Grove, CA)

Applicant:

Name	City	State	Country	Type
Carrillo; Jose M.	Elk Grove	CA	US	

Family ID: **50114961**
Appl. No.: **13/411,785**
Filed: **March 5, 2012**

Current U.S. Class: **52/165** ; 256/68; 52/155; 52/169.13
Current CPC Class: E01F 13/026 (20130101); E04G 21/3223 (20130101)
Current International Class: E04H 12/34 (20060101)
Field of Search: ;52/699,155,156,165,169.13,170,831,848,295-297 ;182/36,112,113 ;256/65.01,65.02,65.03,59,65.04,65.05,65.06,68-69,65.14,DIG.5 ;248/156,121

References Cited [Referenced By]

U.S. Patent Documents

930607	August 1909	Morrill
3880405	April 1975	Brueske
5655755	August 1997	Brandt
5971668	October 1999	Miller
6439344	August 2002	Cole
6779630	August 2004	Choate
7108249	September 2006	Bechtel
2001/0017150	August 2001	Doreste
2002/0175262	November 2002	Brooks, III
2003/0015696	January 2003	Watson
2003/0132427	July 2003	Allenbaugh
2005/0051683	March 2005	Young
2007/0131824	June 2007	Harold et al.
2009/0159865	June 2009	Carvalho et al.

Primary Examiner: Glessner; Brian
Assistant Examiner: Stephan; Beth
Attorney, Agent or Firm: Tracy; Emery L. Eure; Ruth

Claims

What is claimed is:

1. A safety anchor post system for protecting a user from falling while working in precarious areas, the safety anchor post system mounted to a pre-set anchor or support structure embedded in concrete, the safety anchor post system comprising: a tubular post having a first end and a second end; a first sleeve mounted at the second end of the post, the first sleeve having a first bracket; a second sleeve mounted between the first sleeve and the first end of the post, the second sleeve having a second bracket; at least one rail member receivable within each sleeve; a clamping mechanism movable within each bracket and tightenable against the rail members to releasably and securely maintain the at least one rail member within each bracket; and a tie off device mounted between the second sleeve and the first end of the post; wherein the clamping mechanism includes a swivel anchor plate mounted to a swivel post by means of an adjustable swivel post head, wherein a threadable anchor is mounted to each of the sleeves and threadably receives the swivel post allowing the swivel anchor plate to move toward and away from the rail members, wherein a butterfly nut is tightenable against the threadable anchor thereby maintaining the desired relate position of the swivel anchor plate against the rail members thereby releasably locking steadfastly into place.

2. The safety anchor post system of claim 1 and further comprising: a coil rod extending from the first end of the tubular post; wherein the first end of the post has an opening with a stem nut welded therein, the stem nut threadably receiving the coil rod and movable relative to the coil rod along the threads.

3. The safety anchor post system of claim 2 wherein the post is tightened directly against the support structure.

4. The safety anchor post system of claim 2 and further comprising: a base plate restable upon the support

structure; wherein the post is tightened against the base plate.

5. The safety anchor post system of claim 2 wherein the coil rod is threaded directly into the pre-set anchor.

6. The safety anchor post system of claim 2 wherein the coil rod is threaded into a stem chair preformed into the pre-set anchor or support structure.

7. The safety anchor post system of claim 1 and further comprising: a tightening arm positioned adjacent the second end, the tightening arm having a first end and a second end.

8. The safety anchor post system of claim 7 wherein the first end of the tightening arm is pivotally secured to the post, wherein the second end of the tightening arm is movable away from and toward the post.

9. The safety anchor post system of claim 1 wherein the tie off device includes a rotatable anchor sleeve with a tie off ear mounted thereto.

10. A method for protecting a user from falling while working in precarious areas, the method comprising: providing a tubular post having a first end and a second end; mounting a first sleeve at the second end of the post, the first sleeve having a first bracket; mounting a second sleeve between the first sleeve and the first end of the post, the second sleeve having a second bracket; positioning at least one rail member within each bracket; moving a clamping mechanism within each bracket wherein the clamping mechanism includes a swivel anchor plate mounted to a swivel post by means of an adjustable swivel post head, wherein a threadable anchor is mounted to each of the sleeves and threadably receives the swivel post allowing the swivel anchor plate to move toward and away from the rail members, wherein a butterfly nut is tightenable against the threadable anchor thereby maintaining the desired relative position of the swivel anchor plate against the rail members thereby releasably locking steadfastly into place; tightening the clamping mechanism against the rail members to releasably and securely maintain the at least one rail member within each sleeve; and mounting a tie off device between the second sleeve and the first end of the post.

11. A safety anchor post system for protecting a user from falling while working in precarious areas, the safety anchor post system mounted to a pre-set anchor support structure embedded in concrete, the safety anchor post system comprising: a tubular post having a first end and a second end; a tightening arm positioned adjacent the second end, the tightening arm having a first end and a second end; a first sleeve mounted at the second end of the post, the first sleeve having a first bracket; a second sleeve mounted between the tightening arm and the first end of the post, the second sleeve having a second bracket; at least one rail member receivable within each sleeve; a clamping mechanism movable within each bracket and tightenable against the rail members to releasably and securely maintain the at least one rail member within each bracket; and a rotatable tie off device mounted between the second sleeve and the first end of the post; wherein the clamping mechanism includes a swivel anchor plate mounted to a swivel post by means of an adjustable swivel post head, wherein a threadable anchor is mounted to each of the sleeves and threadably receives the swivel post allowing the swivel anchor plate to move toward and away from the rail members, wherein a butterfly nut is tightenable against the threadable anchor thereby maintaining the desired relative position of the swivel anchor plate against the rail members thereby releasably locking steadfastly into place.

12. The safety anchor post system of claim 11 and further comprising: a coil rod extending from the first end of the tubular post; wherein the first end of the post has an opening with a stem nut welded therein, the stem nut threadably receiving the coil rod and movable relative to the coil rod along the threads.

13. The safety anchor post system of claim 12 wherein the post is tightened directly against the support structure.

14. The safety anchor post system of claim 12 and further comprising: a base plate restable upon the support structure; wherein the post is tightened against the base plate.

15. The safety anchor post system of claim 12 wherein the coil rod is embedded directly into a support structure.

16. The safety anchor post system of claim 12 wherein the coil rod is inserted into a stem chair preformed into the support structure.

17. The safety anchor post system of claim 11 wherein the first end of the tightening arm is pivotally secured to the post, wherein the second end of the tightening arm is movable away from and toward the post.

18. The safety anchor post system of claim 11 wherein the tie off device includes a rotatable anchor sleeve with a tie off ear mounted thereto.

Description

BACKGROUND OF THE INVENTION

1. Field of the Invention

This invention relates generally to a safety anchor post system and, more particularly, the invention relates to a safety anchor post system providing durable hand rails when working in precarious areas.

2. Description of the Prior Art

It is widely known that in the building and construction industry in the United States, falls are the leading cause of worker fatalities. On average each year between 150 and 200 workers are killed, and a staggering number of more than 100,000 workers are injured as a result of falls occurring at such building and construction sites. OSHA, the federal government agency that oversees labor and industry standards, has come to recognize that accidents are generally complex events that commonly involve a variety of factors. As a consequence, the standard for fall protection deals with both the human and equipment-related components in designing and implementing standards for protecting workers from fall hazards.

For example, in order to insure the protection of workers it is recommended that both employers and employees implement the following steps or procedures: 1) where protection is required, select fall protection systems appropriate for that situation; 2) use proper construction and installation of safety systems; 3) supervise employees properly; 4) use safe work procedures; and 5) train workers in the proper selection, use, and maintenance of fall protection systems.

More importantly, OSHA has developed specific rules, procedures and systems designed to prevent workers from falling off, onto or through working levels, and to protect workers from being struck by falling objects. These performance-oriented requirements facilitate the ability of employers to provide the mandated protection. The systems and procedures cover most construction workers except those inspecting, investigating, or assessing workplace conditions prior to the actual start of work or after all work has been completed. Areas or activities where fall protection is needed include ramps, runways and other walkways, excavations, hoist areas, holes, formwork and reinforcing steel, leading edge work, unprotected sides and

edges, overhand bricklaying and related work, roofing work, precast concrete erection, wall openings, residential construction and other walking/working surfaces.

Under the above rules, systems and procedures employers are able to select fall protection measures and equipment that are compatible with the type of work being performed and the particular work site. Thus, fall protection systems and equipment can be provided through the use of guardrail systems, safety net systems, personal fall arrest systems, positioning device systems, and warning line systems. While the aforementioned systems cover many situations, one critical problem is the current non-availability of any type of parapet-type safety and fall protection system that can be easily set up and attached to the wall surfaces of home or building structures that may be surrounded by uneven or un-level ground, especially uneven ground surrounding the eaves of the structure. It is often the case that a walkway is constructed on the site by carpenters using 2.times.4's and 2.times.6's that in many cases is the building material that should be used in the home construction, but is instead diverted to construct a hand-built, makeshift walkway prone to failure and accidents.

Despite the ingenuity of conventional systems and devices, there remains a need for a safe, reliable adjustable walkway so that the walkway is disposed in a level and safe manner for use by the workers.

SUMMARY

The present invention is a safety anchor post system for protecting a user from falling while working in precarious areas. The safety anchor post system is mountable to a pre-set anchor or support structure embedded in concrete. The safety anchor post system comprises tubular post having a first end and a second end with a coil rod extending from the tubular post. The first end of the tubular post is releasably receiving at least a portion of the coil rod. A first sleeve is mounted at the second end of the post and a second sleeve is mounted between the first sleeve and the first end of the post with at least one rail member receivable within each sleeve. A clamping mechanism is movable within each sleeve and tightenable against the rail members to releasably and securely maintain the at least one rail member within each sleeve. A tie off device is mounted between the second sleeve and the first end of the post. Upon releasably securing the at least one rail member within each sleeve and tying off to the tie off device, a worker is inhibited from falling from the support structure.

In addition, the present invention includes a safety anchor post system for protecting a user from falling while working in precarious areas. The safety anchor post system is mountable to a pre-set anchor support structure embedded in concrete. The safety anchor post system comprises a tubular post having a first end and a second end with a coil rod extending from the first end of the tubular post. A tightening arm is positioned nearingly adjacent the second end, the tightening arm having a first end and a second end. A first sleeve mounted at the second end of the post and a second sleeve mounted between the tightening arm and the first end of the post. At least one rail member is receivable within each sleeve. A clamping mechanism is movable within each sleeve and tightenable against the rail members to releasably and securely maintain the at least one rail member within each sleeve. A rotatable tie off device is mounted between the second sleeve and the first end of the post. Upon releasably securing the at least one rail member within each sleeve and tying off to the tie off device, a worker is inhibited from falling.

The present invention further includes a method for protecting a user from falling while working in precarious areas. The method comprises providing a tubular post having a first end and a second end, extending a coil rod from the first end of the tubular post, threading the coil rod at first end to the support structure, releasably positioning the first end of the tubular post over at least a portion of the coil rod, mounting a first sleeve at the second end of the post, mounting a second sleeve between the first sleeve and the first end of the post, positioning at least one rail member within each sleeve, moving a clamping

mechanism within each sleeve, tightening the clamping mechanism against the rail members to releasably and securely maintain the at least one rail member within each sleeve, mounting a tie off device between the second sleeve and the first end of the post, and inhibiting a worker from falling from the support structure.

BRIEF DESCRIPTION OF THE DRAWINGS

FIG. 1 is an elevational side view illustrating a safety anchor post system, constructed in accordance with the present invention;

FIG. 2 is an elevational side view illustrating another embodiment of the safety anchor post system, constructed in accordance with the present invention, with a coil stem and coil stem chair;

FIG. 3 is an elevational side view illustrating the bottom portion of the safety anchor post system with the swivel tie off point, constructed in accordance with the present invention;

FIG. 4 is an elevational side view illustrating a tightening arm of the safety anchor post system, constructed in accordance with the present invention; and

FIG. 5 is an elevational side view illustrating a rail securing system of the safety anchor post system, constructed in accordance with the present invention.

DETAILED DESCRIPTION OF THE PREFERRED EMBODIMENTS

As illustrated in FIGS. 1-5, the present invention is a safety anchor post system, indicated generally at 10, providing durable hand rails when working in precarious areas. The safety anchor post system 10 of the present invention is an easily installed, safe-to-use support system complying will all safety guidelines set by the Occupational Safety and Health Administration (OSHA).

The safety anchor post system 10 of the present invention comprises an elongated, tubular post 12 having a first end and a second end and preferably measuring approximately forty-two inches (42") in total height from the first end to the second end. The first end of the post 12 has an opening with a coil rod protruding from the first end of the post 12. The coil rod 16 can be threaded directly into a pre-set anchor or support structure 18 in concrete, or can be inserted into a stem chair 20 pre-formed into the concrete. Furthermore, the post 12 can be tightened directly against the pre-set anchor or support structure 18 or can be tightened against a base plate 22 resting upon the pre-set anchor or support structure 18. The first end of the post 12 has an opening with a stem nut 14 welded therein with the stem nut 14 threadably receiving the coil rod 16 and movable relative to the coil rod 16 along the threads thereby limiting the extent of the coil rod 16 being threaded into the pre-set anchor or support structure 18 in the concrete.

In addition, the safety anchor post system 10 of the present invention includes a tightening arm 24 positioned adjacent the second end of the post 12 with the tightening arm 24 having a first end and a second end. The first end of the tightening arm 24 is pivotally secured to the post 12 while the second end of the tightening arm 24 is movable away from and toward the post 12. By moving the second end of the tightening arm 24 away from the post 12, the user gains a leverage advantage to drive the coil rod 16 of the post 12 into the pre-set anchor 18.

The safety anchor post system 10 of the present invention further includes a first sleeve 26 mounted at the second end of the post 12 and a second sleeve 28 mounted between the tightening arm 24 and the first end of the post 12. The first sleeve 26 and the second sleeve 28 are preferably identical with each receiving a pair of rail members 30. A clamping mechanism 32 is movable within each sleeve 26, 28 and tightenable against the

rail members 30 to releasably and securely maintain the rail members 30 within each respective sleeve 26, 28.

In a preferred embodiment of the safety anchor post system 10 of the present invention, the clamping mechanism 32 includes a swivel anchor plate 34 mounted to a swivel post 36 by means of an adjustable swivel post head 38. A threadable anchor 40 mounted to each of the sleeves 26, 28 threadably receives the swivel post 36 allowing the swivel anchor plate 34 to move toward and away from the rail members 30. Once the desired position of the swivel anchor plate 34 has been reached, a butterfly nut 42 can be tightened against the threadable anchor 40 thereby maintaining the desired relative position of the swivel anchor plate 34 against the rail members 30 thereby releasably locking steadfastly into place without the need to employ any other tools for this purpose. It should be noted that the position of the first sleeve 26 and the second sleeve 28 can be fixed on the post 12 or adjustable to move along the length of the post 12, depending on the desires of the user and manufacturer.

Mounted between the second sleeve 28 and the first end of the post 12 of the safety anchor post system 10 of the present invention is rotatable anchor sleeve 44 with a tie off ear 46 mounted thereto. In use, a user can secure himself or herself to the tie off ear 46 thereby inhibiting the user from accidentally falling when he or she is working in an area that has a perimeter of limited tie off points. The rotatable anchor sleeve 44 allows the user to move freely without concern of tangling of the tie off line.

The safety anchor post system 10 of the present invention affords a number of important benefits and advantages. Created by a construction professional for express use by fellow tradesmen when working steep, high areas, such as high rise buildings and bridges, the safety anchor post system provides effortless safety when support and balance are essential. Easily embedded into concrete and able to withstand hundreds of pounds, the safety anchor post system 10 is the ideal accoutrement to line leading edges. Expediently installed without the need for additional tools, the safety anchor post system 10 saves valuable time on construction jobs where wasted minutes equal wasted dollars. Thus, employment of multiple units of the portable, lightweight safety anchor post system 10 exponentially increases production while remaining in compliance with OSHA safety guidelines. Because of this, companies that insure such projects will certainly look kindly on the use of the safety anchor post system 10 since it can be installed in a line of units that are eight feet apart or less, and pass on reduced premiums to construction companies. Fashioned of durable, high quality materials and components, a product such as the safety anchor post system 10 is sure to withstand multiple uses at many jobsites.

The safety anchor post system 10 of the present invention can conceivably revolutionize the construction industry. Promoting efficiency, productivity, and most importantly, safety, the safety anchor post system 10 can become the industry standard.

The foregoing exemplary descriptions and the illustrative preferred embodiments of the present invention have been explained in the drawings and described in detail, with varying modifications and alternative embodiments being taught. While the invention has been so shown, described and illustrated, it should be understood by those skilled in the art that equivalent changes in form and detail may be made therein without departing from the true spirit and scope of the invention, and that the scope of the present invention is to be limited only to the claims except as precluded by the prior art. Moreover, the invention as disclosed herein may be suitably practiced in the absence of the specific elements which are disclosed herein.

* * * * *

Images