# KROEKER, INC.

DEMOLITION AND RECYCLING CONTRACTORS

CA LIC 621866 A C12 C21 C57 C61/D06 HAZ ASB • AZ LIC 131453 A • NV LIC 50909 A


January 24, 2017


RECEIVED

JAN 26 2017

OCCUPATIONAL SAFETY AND HEALTH STANDARDS BOARD


To: Occupational Safety & Health Standards Board
2520 Venture Oaks Way, Suite 350
Sacramento, California 95833

Subject: Proposal to Amend Demolition Safety Orders Section 1735 (v) to include a cable system around floor openings which would prevent equipment from running over the edge.

Dear Honorable Board Members,

**INTRODUCTION**

The National Demolition Association (NDA) is an organization that has been in existence for 45 years, and currently has 295 company members, 97 associate company members, and 2 International company members. It is comprised of eight committees which presents to the Board of Directors key demolition industry concerns, and agenda items to enhance and grow the industry. The association has been instrumental in providing its members with information on the latest equipment which is presented at our annual convention, updates on regulatory issues, and providing educational, and safety information. An appointed number of our members are currently providing their expertise in the revision of the ANSI A10.6 – Demolition Operations.

**GENERAL INFORMATION**

The Safety Committee of the NDA was approached by its members with a concept that utilized a cable system to deposit debris through a floor opening using a skid steer as opposed to the current curb or stop-log design found in CFR 1926.856(b) which reads;

*"Floor openings shall have curbs or stop-logs to prevent equipment from running over the edge."*

Through many conversations with the Occupations Safety and Health Administration (OSHA) in Washington, D. C. the NDA recently received confirmation that a cable system could be used in lieu of a stop log guide under CFR 1926.856(b) for floor openings when depositing material to a lower level provided specific criteria are met. Attached as EXHIBIT A is a letter from Dean McKenzie, Director, Directorate of Construction with OSHA in Washington, D. C. which includes the conceptual design that was presented.


4627 S. Chestnut Ave. • Fresno, CA 93725-9370
Tel (559) 237-3764 (FROG) • Fax (559) 268-3366 (DEMO)
Toll Free (800) J KROEKER (557-6353)
www.kroekerinc.com

**PROS and CONS**

The curb or stop-log system, to the best of my knowledge, has not been updated since its inception, and although there is no apparent data that I could find indicating any motorized equipment have run over the edge of the curb or stop-log system the NDA Safety Committee believes that the cable system design would provide a safer method to dispose of materials through floor openings that are equal or superior to the current stop-log design.

CONS

1) With the introduction of larger and more powerful skid steers, which are used extensively in the demolition industry to move/deposit material, the curb or stop-log would not prevent the equipment from running over the edge, and falling through the opening.

2) When pushing material with the skid steer towards the floor opening utilizing the current curb/stop-log the operator has to raise the bucket in the air as they approach the floor opening to clear the curb/stop-log as they deposit the material in the opening. This allows a couple of things to happen.
   a) The center of gravity on the skid steer is moved forward. As the weight in the bucket is increased the center of gravity is moved further forward and the likelihood of the skid steer falling forward into the opening is increased.
   b) Any barrier/guardrails may have to be removed to allow the skid steer to deposit the material in the opening which presents a potential fall hazard.

PROS

With the introduction of a cable system designed by a professional engineer the material could be pushed into the floor opening eliminating the hazards previously discussed in the following ways.

1) Forward travel of the equipment would prevent the skid steer from falling into the floor opening.
2) Material could be pushed into the floor opening;
   a) Eliminating the bucket from being raised into the air and changing the center of gravity on the machine.
   b) Eliminating the removal of barriers/guardrails which would eliminate a fall hazard.

**PROPOSAL**

The proposal is not to eliminate the current standard of §1735(v) but to include an alternative design to prevent mechanical equipment from running over the edge of floor openings.

This petition is being presented to request that the current regulation in the California Code of Regulations (CCR) Title 8, 1735(v) which reads;

*"Where mechanical equipment is used for demolition work, floor openings shall have curbs or stop-logs to prevent equipment from running over the edge,"*

Be amended to read as follows;

*(v) Where mechanical equipment is used for demolition work, floor openings shall meet the following requirements:*
*(1) Curbs, or stop-logs shall be installed to prevent mechanical equipment from running over the edge.*
*(2) Cable system consisting of two wire ropes shall be designed by a registered professional engineer, and of such construction to prevent the equipment from falling into the opening.*

I look forward to your response on the status of this petition. Please do not hesitate to contact me if you have any questions.

Sincerely,

Michael Gunlund, CHST
Safety Director
NDA Safety Chairperson

# APPENDIX A

**U.S. Department of Labor**

Occupational Safety and Health Administration
Washington, D.C. 20210

Reply to the attention of:

DEC 2 - 2016

DEC 06 2016
SEYFARTH SHAW

Mark A. Lies II
Seyfarth Shaw LLP
131 South Dearborn Street
Suite 2400
Chicago, IL 60603

Dear Mr. Lies:

Thank you for your March 30, 2015, letter to the Occupational Safety and Health Administration (OSHA) Directorate of Construction and subsequent latest revised engineering analysis of March 4, 2016 sent via e-mail to Mr. Dinesh Shah on March 4, 2016. You had specific questions concerning the curbs or stop-logs around the floor opening edges. This letter constitutes OSHA's interpretation of only the requirements discussed and may not be applicable to any question not delineated in your original correspondence.

**Question:**

Is it permissible to use an engineered physical barrier consisting of two wire ropes fastened to columns and walls along the perimeter of a floor opening during demolition operation to prevent equipment from running over the edge of the opening in lieu of curbs and stop-logs required by CFR 1926.856(b)

**Response:**

As an initial matter, OSHA is precluded from approving or endorsing specific requirements.

CFR 1926.856(b) states, "*Floor openings shall have curbs or stop-logs to prevent equipment from running over the edge*".

We have reviewed the "Calculations for: Skid Restraint – Conceptual Design" of March 4, 2016 prepared under the direct control and supervision of Jason M. Conn, licensed professional engineer in the State of Michigan. Mr. Conn's conceptual design was based on the use of two wire ropes of specific size and specific strength with a specific amount of pre-determined sag, fastened to two columns or walls along the perimeter of the opening. Mr. Conn's design was based on a specific distance between the columns or walls along the perimeter of the opening, with the columns and walls being of requisite strength to support the load created by the cables. Further, Mr. Conn's design was based on a specified weight of the steer equipment traveling at a speed not greater than the speed specified by Mr. Conn.

Our review indicates that for a specific design with all the limitations mentioned above, the use of wire ropes could potentially prevent equipment from running over the edge of an opening. However the design has to be specific for a certain location in a structure, and for specified equipment traveling at a certain speed. Wire ropes must be designed for each specific location in a structure to satisfy the requirement that the equipment is prevented from falling over. The structural design of the wire rope barriers is fairly involved, and therefore must require services of a structural engineer to design the wire rope barrier. Finally, any design documents must contain the signature and seal of a registered engineer.

Not one design can be used for all locations due to the following variables:

- Spacing of columns or walls in a given structure.
- Strength of columns or walls to support the wire ropes.
- Size and strength of wire ropes.
- Weight of equipment used.
- Speed of traveling of the equipment.
- Manner of attachment of wire ropes to the columns or walls
- Pre-determined sag of the wire ropes.

Thank you for your interest in occupational safety and health. We hope you find this information helpful. OSHA's requirements are set by statute, standards, and regulations. Our letters of interpretation do not create new or additional requirements but rather explain these requirements and how they apply to particular circumstances. This letter constitutes OSHA's interpretation of the requirements discussed. From time to time, letters are affected when the Agency updates a standard, a legal decision impacts a standard, or changes in technology affect the interpretation. To assure that you are using the correct information and guidance, please consult OSHA's website at http://www.osha.gov. If you have further questions, please feel free to contact the Directorate of Construction at (202) 693-2020.

Sincerely,

Dean McKenzie

Dean McKenzie, Director
Directorate of Construction

Enclosure

CONN ENGINEERING
CONSULTANTS, INC.
P.O. BOX 791 • 107 N. BRIDGE ST. • LINDEN, MI 48451 • P: 810.458.4350 • F: 810.458.4592

**CALCULATIONS FOR:**

# Skid Restraint
## Conceptual Design

**March 4 , 2016**

*PREPARED UNDER THE DIRECT CONTROL AND SUPERVISION OF:*

STATE OF MICHIGAN
JASON M.
CONN
ENGINEER
No.
6201051350
LICENSED PROFESSIONAL ENGINEER

## TABLE OF CONTENTS

1 ENGINEERING APPROACH
2 ENGINEERING ANALYSIS
3 CONCEPTUAL DETAIL

CONN ENGINEERING
CONSULTANTS, INC.
P.O. BOX 791 • 107 N. BRIDGE ST. • LINDEN, MI 48451 • P: 810.458.4350 • F: 810.458.4592

March 4, 2016

Skid Steer Restraint: Engineering Approach.

The cable skid steer restraint is a restraint system that will prevent skid-steer loaders and other equipment from driving over the edge of a building during demolition and material removal. There will be two wire rope cables installed between two building columns or walls as shown on the enclosed detail. Both wire rope cables will have visible markers on them for safety. It is assumed that only one wire rope will provide the lateral resistance. The wire rope cables will allow some give in order for impact forces to be reduced in comparison to rigid barriers. The analysis was done by assuming that a CAT 246 skid-steer is fully loaded with a weight of 10,792 lbs and traveling at a coasting speed of 3mph at the time of impacting the wire rope cables. The proper cables will be designed for the desired opening to allow the cables to deflect a maximum of one foot.

CONN ENGINEERING
CONSULTANTS, INC.
P.O. BOX 791 • 107 N. BRIDGE ST. • LINDEN, MI 48451 • P: 810.458.4350 • F: 810.458.4592

March 4, 2016

Conceptual Design and Limitations.

This skid steer restraint is a conceptual design for the use of wire rope cables in lieu of concrete curbs and stop logs around the openings of the debris shaft. This design is limited to:

- The maximum column spacing of 20'.
- The edge of the opening shall be in line with the column spacing where wire rope cables would be attached.
- The end columns/walls where wire rope cables are attached are capable to resist the forces developed on the wire rope cables during the dumping operations.
- No substitution of material is allowed unless it is equivalent in the strength and of higher grade.
- Any deviation from the conceptual design shall be evaluated by a professional engineer licensed within the jurisdiction of the project.

# ENGINEERING ANALYSIS

| | | |
|---|---|---|
| SKID WEIGHT = | 10,792 LBS | |
| SKID SPEED = | 3 MPH | 4.4 FT/S |
| STOPPING DISTANCE = | 1.00 FT. | |
| CABLE LENGTH = | 20.0 FT. | |
| ACCELERATION = | 9.68 $FT/S^2$ | |
| STOPPING FORCE : F=ma | | |
| STOPPING FORCE = | 3246.92 LBS | |
| STOPPING FORCE x2 = | 6493.84 LBS | |
| | 5.71 | |
| CABLE FINAL ANGLE = | 0.09967 RAD | |
| | 5.71059 DEGREES | |
| | F = 6493.84 LBS | |
| TOTAL TENSION = | P / SIN(CABLE ANGLE) | |
| | T = 65262.3 LBS | |
| FORCE APPLIED CABLE T/2= | 32631 LBS | |
| WORKING LOAD = | 16 TONS | |

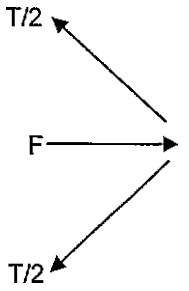


**ULTIMATE CABLE LOAD (FS5) = 82 TONS

**1 3/8" WIRE ROPE CABLE (FIBER CORE (EIPS) 6x19)**

ULTIMATE LOAD LOAD = 85 TONS OK

**DESIGN CLAMP LOAD = 16 TONS

**IPTK BEAM CLAMP (2702999)**

ULTIMATE LOAD LOAD = 25 TONS OK

*Conceptual Analysis Based on the Following:*

* Coasting speed of 3mph.
* Integrity of the existing structure is capable of supporting applied loads.
* Skid-steer frame is capable of supporting the applied loads.
* The skid-steer frame impacts square to the cables.
* Cable pre-tension and sizing is adeauate for the column spacing.

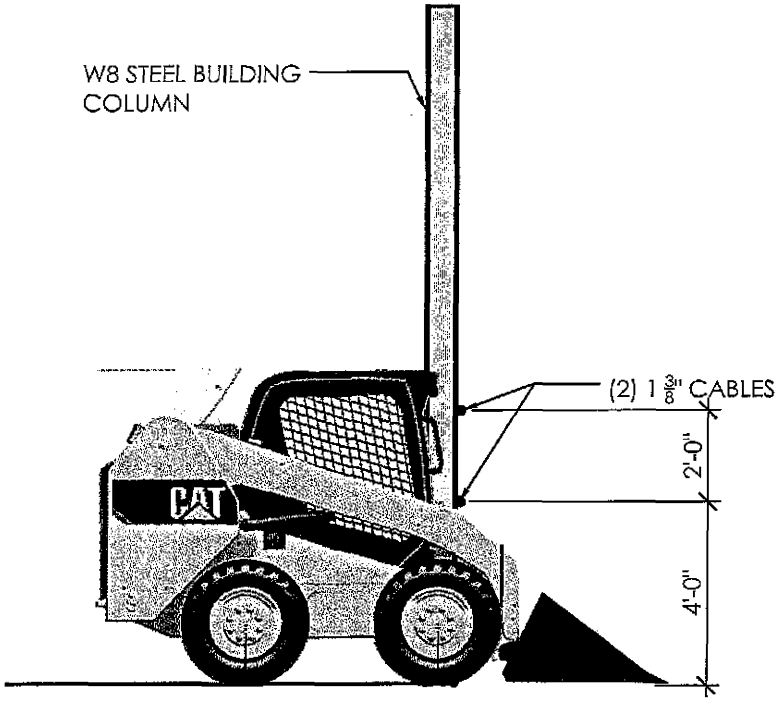


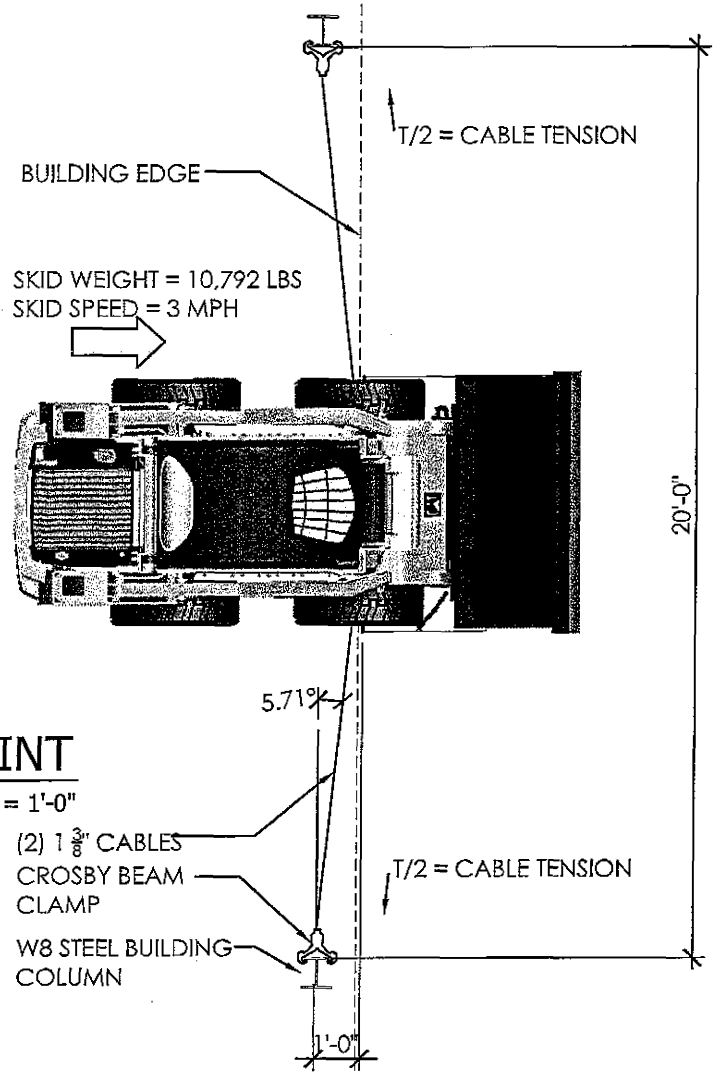


1 SKID RESTRAINT

SCALE: 1/4" = 1'-0"

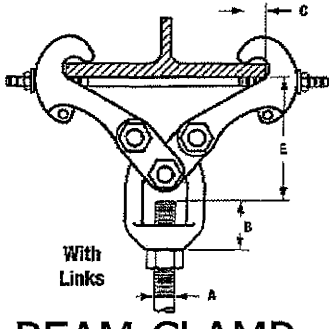


2 BEAM CLAMP

SCALE: NTS

**THE CONTRACTOR WILL BE RESPONSIBLE TO MAKE SURE THAT THE END COLUMNS OR END WALLS WHERE WIRE ROPE ARE BE ATTACHED ARE CAPABLE TO RESIST THE FORCES DEVELOPED BY THE COMPONENT OF THE RESULTING TENSION FROM THE WIRE ROPE AND TO VERIFY THE OVERALL STRUCTURAL INTEGRITY OF THE EXISTING STRUCTURE.**

conn engineering consultants, inc.
commercial•industrial•institutional•residential structural engineering
107 n. bridge st.
linden, mi 48451
p. 810.458.4350
f. 810.458.4592
www.connengineering.com

job information:

# SKID STEER RESTRAINT SYSTEM STEEL STRUCTURE

| ISSUED FOR | DATE |
|---|---|
| FOR APPROVAL | 04.30.14 |
| REV - A | 09.14.15 |
| REV - B | 12.07.15 |

DATE: 04.30.14
DRAWN: JMC
CHECKED: BMR
SCALE: AS NOTED
JOB NO: 14-236
SHEET TITLE:

SHEET D1

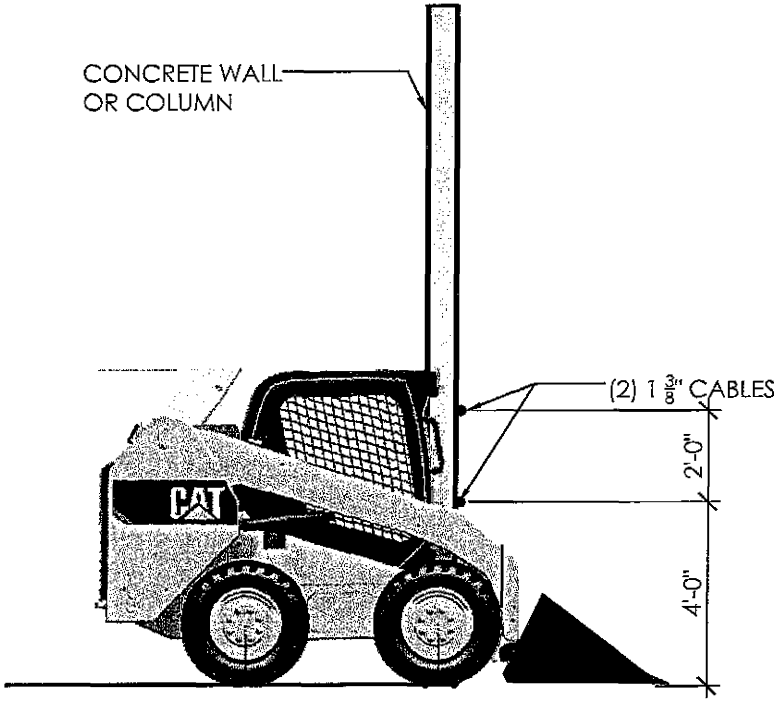


1 SKID RESTRAINT

SCALE: 1/4" = 1'-0"

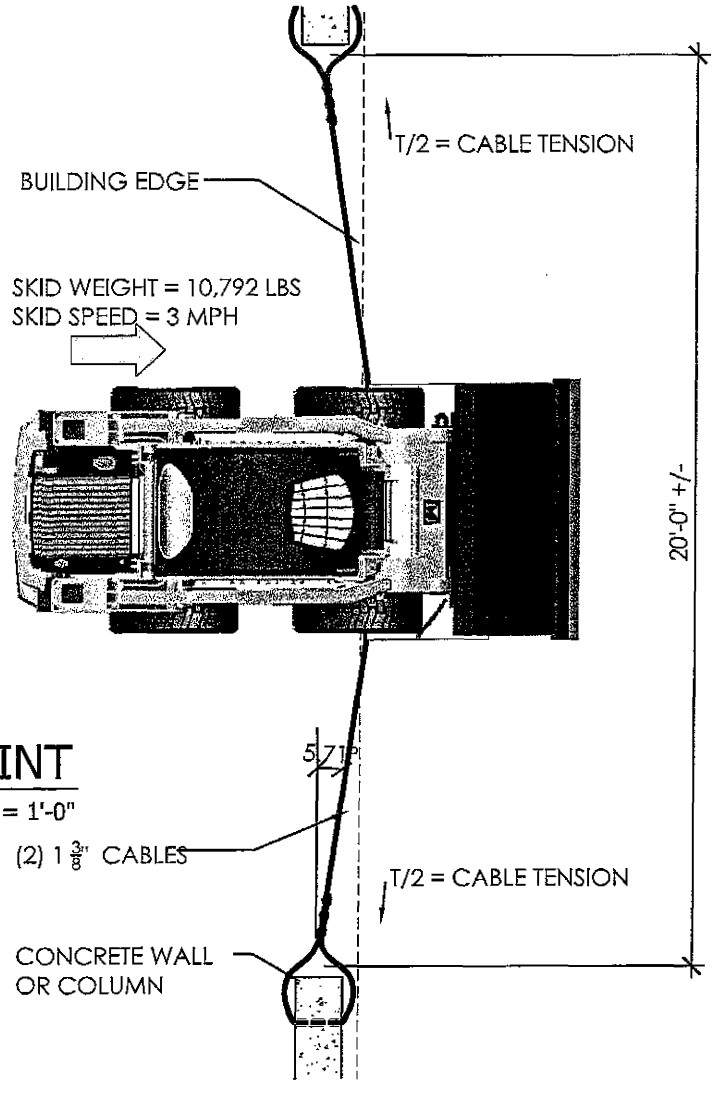


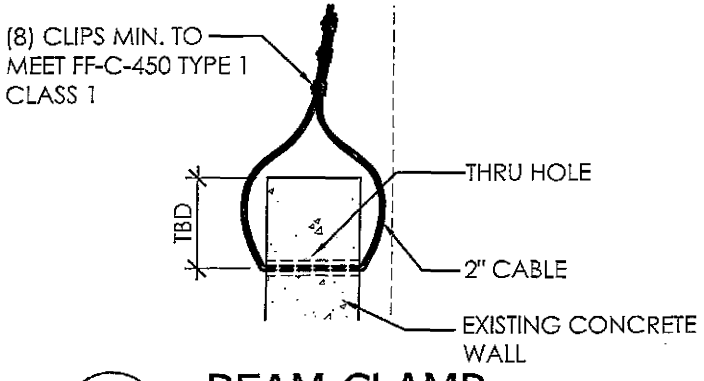


2 BEAM CLAMP

SCALE: NTS

**THE CONTRACTOR WILL BE RESPONSIBLE TO MAKE SURE THAT THE END COLUMNS OR END WALLS WHERE WIRE ROPE ARE BE ATTACHED ARE CAPABLE TO RESIST THE FORCES DEVELOPED BY THE COMPONENT OF THE RESULTING TENSION FROM THE WIRE ROPE AND TO VERIFY THE OVERALL STRUCTURAL INTEGRITY OF THE EXISTING STRUCTURE.**

conn engineering consultants, inc.
commercial+industrial+institutional+residential structural engineering
107 n. bridge st.
linden, mi 48451
p. 810.458.4350
f. 810.458.4592
www.connengineering.com

job information:

# SKID STEER RESTRAINT SYSTEM CONCRETE STRUCTURE

| ISSUED FOR | DATE |
|---|---|
| FOR APPROVAL | 04.30.14 |
| REV - A | 09.14.15 |
| REV - B | 12.07.15 |

DATE: 04.30.14
DRAWN: JMC
CHECKED: BMR
SCALE: AS NOTED
JOB NO: 14-236
SHEET TITLE:

SHEET D2

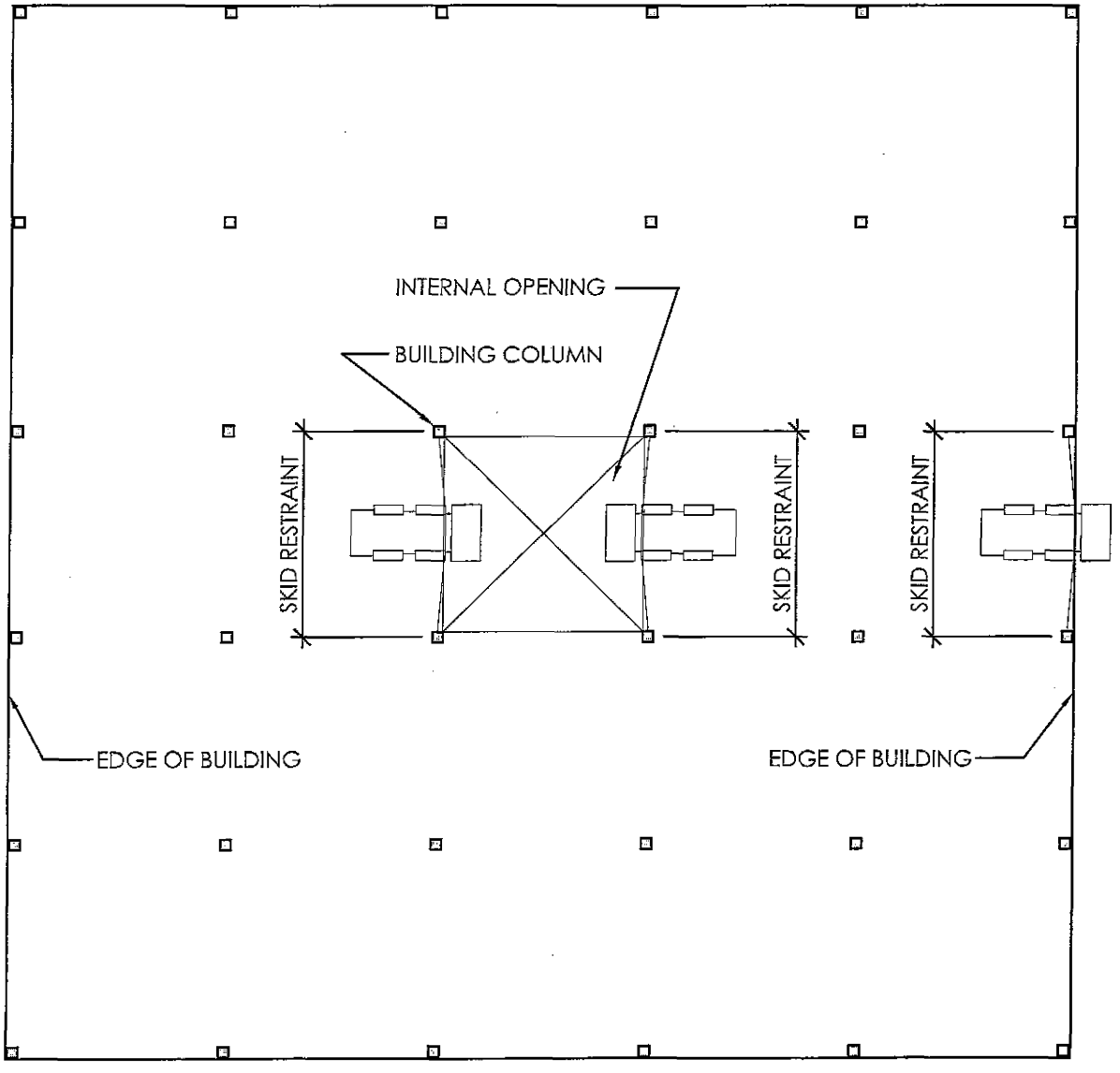


1 SKID RESTRAINT OPTIONAL LOCATIONS

SCALE: NTS

conn engineering consultants, inc.
commercial•industrial•institutional•residential structural engineering
107 n. bridge st.
linden, mi 48451
p. 810.458.4350
f. 810.458.4592
www.connengineering.com

job information:

# SKID STEER RESTRAINT SYSTEM CONCRETE STRUCTURE

| ISSUED FOR | DATE |
|---|---|
| FOR APPROVAL | 04.30.14 |
| REV - A | 09.14.15 |
| REV - B | 12.07.15 |
| REV - C | 02.17.16 |

DATE: 04.30.14

DRAWN: JMC

CHECKED: BMR

SCALE: AS NOTED

JOB NO: 14-236

SHEET TITLE:

SHEET D3

# RIGGING HARDWARE

West Coast Wire Rope

## WIRE ROPE CLIPS

### FORGED & MALLEABLE

4

Clips meet Federal Specification FF-C-450 TYPE 1 Class 1
Forged Carbon steel clip base
Heavy Hex Type nuts

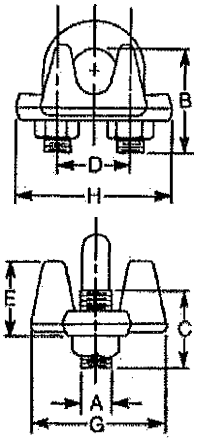


| CLIP AND ROPE SIZE (in.) | Min. No of CLIPS Required | DIMENSIONS (in.) | | | | | | | WEIGHT PER 100 (lbs.) |
|---|---|---|---|---|---|---|---|---|---|
| | | A | B | C | D | E | G | H | |
| 1/8 | 2 | 0.22 | 0.72 | 0.44 | 0.47 | 0.41 | 0.81 | 0.94 | 6 |
| 3/16 | 2 | 0.25 | 0.97 | 0.56 | 0.59 | 0.50 | 0.94 | 1.16 | 10 |
| 1/4 | 2 | 0.31 | 1.03 | 0.50 | 0.75 | 0.66 | 1.19 | 1.44 | 18 |
| 5/16 | 2 | 0.38 | 1.38 | 0.75 | 0.88 | 0.72 | 1.31 | 1.69 | 30 |
| 3/8 | 2 | 0.44 | 1.50 | 0.75 | 1.00 | 0.91 | 1.63 | 1.94 | 47 |
| 7/16 | 2 | 0.50 | 1.88 | 1.00 | 1.19 | 1.03 | 1.81 | 2.28 | 76 |
| 1/2 | 3 | 0.50 | 1.88 | 1.00 | 1.19 | 1.13 | 1.91 | 2.28 | 80 |
| 9/16 | 3 | 0.56 | 2.25 | 1.25 | 1.31 | 1.22 | 2.06 | 2.50 | 104 |
| 5/8 | 3 | 0.56 | 2.38 | 1.25 | 1.31 | 1.34 | 2.06 | 2.50 | 106 |
| 3/4 | 4 | 0.62 | 2.75 | 1.44 | 1.50 | 1.41 | 2.25 | 2.84 | 150 |
| 7/8 | 4 | 0.75 | 3.12 | 1.62 | 1.75 | 1.59 | 2.44 | 3.16 | 212 |
| 1 | 5 | 0.75 | 3.50 | 1.81 | 1.88 | 1.78 | 2.63 | 3.47 | 260 |
| 1 1/8 | 6 | 0.75 | 3.88 | 2.00 | 2.00 | 1.91 | 2.81 | 3.59 | 290 |
| 1 1/4 | 7 | 0.88 | 4.25 | 2.13 | 2.31 | 2.19 | 3.13 | 4.13 | 430 |
| 1 3/8 | 7 | 0.88 | 4.63 | 2.31 | 2.38 | 2.31 | 3.13 | 4.19 | 460 |
| 1 1/2 | 8 | 0.88 | 4.94 | 2.38 | 2.59 | 2.44 | 3.41 | 4.44 | 540 |
| 1 5/8 | 8 | 1.00 | 5.31 | 2.62 | 2.75 | 2.66 | 3.63 | 4.75 | 700 |
| 1 3/4 | 8 | 1.13 | 5.75 | 2.75 | 3.06 | 2.94 | 3.81 | 5.28 | 925 |
| 2 | 8 | 1.25 | 6.44 | 3.00 | 3.38 | 3.28 | 4.44 | 5.88 | 1300 |
| 2 1/4 | 8 | 1.25 | 7.13 | 3.19 | 3.88 | 3.19 | 4.50 | 6.38 | 1600 |
| 2 1/2 | 9 | 1.25 | 7.69 | 3.44 | 4.13 | 3.69 | 4.05 | 6.63 | 1900 |
| 2 3/4 | 10 | 1.25 | 8.31 | 3.56 | 4.38 | 4.88 | 5.00 | 6.88 | 2300 |
| 3 | 10 | 1.50 | 9.19 | 3.88 | 4.75 | 4.69 | 5.88 | 7.63 | 3300 |
| 3 1/2 | 12 | 1.50 | 10.75 | 4.50 | 5.50 | 6.00 | 6.19 | 8.38 | 4000 |

Clips meet Federal Specification
FF-C-450 TYPE 1 Class 2
Malleable Iron Zinc plated
All nuts regular hex type

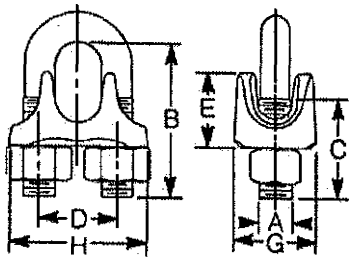


| CLIP AND ROPE SIZE (in.) | Min. No of CLIPS Required | DIMENSIONS (in.) | | | | | | | WEIGHT PER 100 (lbs.) |
|---|---|---|---|---|---|---|---|---|---|
| | | A | B | C | D | E | G | H | |
| 1/8 | 2 | 0.25 | 0.81 | 0.50 | 0.50 | 0.44 | 0.50 | 0.94 | 6 |
| 3/16 | 2 | 0.25 | 0.97 | 0.63 | 0.59 | 0.50 | 0.59 | 1.06 | 10 |
| 1/4 | 2 | 0.31 | 1.22 | 0.88 | 0.69 | 0.63 | 0.69 | 1.38 | 18 |
| 5/16 | 2 | 0.31 | 1.22 | 0.88 | 0.69 | 0.69 | 0.69 | 1.38 | 30 |
| 3/8 | 2 | 0.38 | 1.63 | 1.00 | 0.88 | 0.82 | 0.88 | 1.63 | 47 |
| 7/16 | 3 | 0.38 | 1.63 | 1.00 | 0.88 | 0.82 | 0.92 | 1.63 | 76 |
| 1/2 | 3 | 0.44 | 2.00 | 1.25 | 1.00 | 1.06 | 1.00 | 1.88 | 80 |
| 9/16 | 3 | 0.50 | 2.31 | 1.47 | 1.19 | 1.13 | 1.13 | 2.13 | 104 |
| 5/8 | 3 | 0.50 | 2.31 | 1.47 | 1.19 | 1.31 | 1.13 | 2.13 | 106 |
| 3/4 | 4 | 0.56 | 2.56 | 1.75 | 1.35 | 1.50 | 1.25 | 2.44 | 150 |
| 7/8 | 4 | 0.63 | 3.06 | 1.81 | 1.63 | 1.75 | 1.75 | 2.88 | 212 |
| 1 | 4 | 0.63 | 3.38 | 2.06 | 1.75 | 1.92 | 2.00 | 3.00 | 260 |
| 1 1/8 | 5 | 0.75 | 3.88 | 2.19 | 2.06 | 2.13 | 2.25 | 3.44 | 290 |
| 1 1/4 | 5 | 0.75 | 3.88 | 2.19 | 2.06 | 2.38 | 2.50 | 3.44 | 430 |
| 1 3/8 | 6 | 0.88 | 4.50 | 2.00 | 2.59 | 2.88 | 3.13 | 4.13 | 460 |
| 1 1/2 | 6 | 0.88 | 4.50 | 2.00 | 2.59 | 3.00 | 3.25 | 4.25 | 540 |

NOTE: Malleable clips are not designed for overhead lifting.

Stainless steel wire rope clips on pages 103.

# WIRE ROPE

West Coast Wire Rope

## GENERAL PURPOSE

### BRIGHT 6X19 CLASS (6x19, 6X21, 6X25, 6X26)



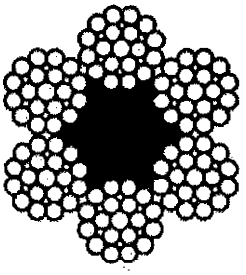

6 x 25 FILLER WIRE
FIBER CORE

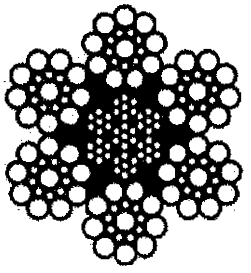

6 X 19 SEALE
IWRC

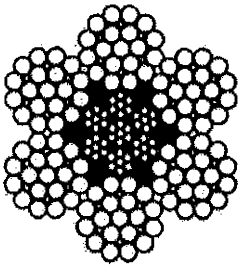

6 X 25 FILLER WIRE
IWRC

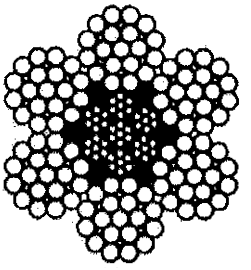

6 X 26 IWRC
WARRINGTON SEALE

(IWRC: INDEPENDENT WIRE ROPE CORE OR CENTER)
According to Federal Specifications RR-W-410D, preformed, right regular lay, light to heavy lubrication.

**Read important warnings and information on pages 6 - 7 and 12 preceding wire rope section.**

| Diameter In Inches | FIBER CORE (EIPS) | | IWRC (EIPS) | |
|---|---|---|---|---|
| | Approx. weight per foot in pounds | Breaking strength in Tons* | Approx. weight per foot in pounds | Breaking strength in Tons * |
| 1/4 | 0.105 | 3.02 | 0.116 | 3.4 |
| 5/16 | 0.164 | 4.69 | 0.18 | 5.27 |
| 3/8 | 0.236 | 6.71 | 0.26 | 7.55 |
| 7/16 | 0.32 | 9.09 | 0.35 | 10.2 |
| 1/2 | 0.42 | 11.8 | 0.46 | 13.3 |
| 9/16 | 0.53 | 14.09 | 0.59 | 16.8 |
| 5/8 | 0.66 | 18.3 | 0.72 | 20.6 |
| 3/4 | 0.95 | 26.2 | 1.04 | 29.4 |
| 7/8 | 1.29 | 35.4 | 1.42 | 39.8 |
| 1 | 1.68 | 46 | 1.85 | 51.7 |
| 1 1/8 | 2.13 | 57.9 | 2.34 | 65 |
| 1 1/4 | 2.63 | 71 | 2.89 | 79.9 |
| 1 3/8 | 3.18 | 85.4 | 3.5 | 96 |
| 1 1/2 | 3.78 | 101 | 4.16 | 114 |
| 1 5/8 | 4.44 | 118 | 4.88 | 132 |
| 1 3/4 | 5.15 | 136 | 5.67 | 153 |
| 2 | 6.72 | 176 | 7.39 | 198 |
| 2 1/4 | 8.51 | 220 | 9.36 | 247 |
| 2 1/2 | 10.5 | 269 | 11.6 | 302 |
| 2 3/4 | - | - | 14 | 361 |
| 3 | - | - | 16.6 | 425 |
| 3 1/2 | - | - | 22.6 | 564 |

NOTE: Lang Lay, left lay, alternate lay, seale available in some sizes.
Heavy lubrication on request.

*Listed for comparison only. Actual operating loads may vary, but should never exceed the recommended design factor or 20% of catalog Breaking Strength.

# Beam Clamps

## IPTK

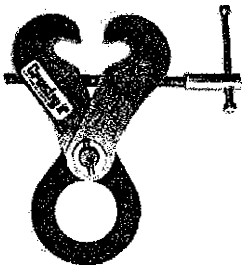

This IPTK series beam clamp is suitable for use as a temporary tackle eye for a beam.

## For the Transfer of Steel Beams and Attachment of Tackle Eye

- Available in capacities of 2 thru 25 metric tons.
- Wide variety of jaw openings available: 3" to 40".
- Welded alloy steel body for strength and smaller size. Forged alloy components, where required.
- Individually Proof Tested to 2 times the Working Load Limit with certification.
- Company name (CrosbyIP), logo, Working Load Limit and jaw opening permanently stamped on body.
- Each product is individually serialized, with the serial number and Proof Load test date stamped on body. Serial number is included on the test certificate with maintenance and warranty logbook.
- Maintenance replacement parts are available.
- Manufactured by a ISO 9001 facility.
- All sizes are **RFID EQUIPPED.**

### Model IPTK: With Hoisting Eye
### Model IPTKW: Without Hoisting Eye
### Model IPTKU: With Hinged Hoisting Eye

| Model | Working Load Limit (t)* | Stock No. | Weight Each (lbs.) | Dimensions (in.) Jaw A | C | D | E | F | H | J | K |
|---|---|---|---|---|---|---|---|---|---|---|---|
| IPTK | 2 | 2700996 | 13.2 | 3.00 - 7.50 | A + 3.13 | 4.92 | 2.95 | - | .98 | - | .79 |
| IPTK | 3 | 2700997 | 14.3 | 3.00 - 7.50 | A + 3.13 | 4.92 | 2.95 | - | .98 | - | .79 |
| IPTK | 4 | 2700998 | 18.7 | 5.88 - 11.25 | A + 4.00 | 4.92 | 2.95 | - | 1.38 | - | .79 |
| IPTK | 5 | 2700994 | 24.3 | 4.75 - 13.75 | A + 7.67 | 4.92 | 2.95 | - | 1.57 | - | .79 |
| IPTK | 10 | 2700970 | 68.3 | 11.75 - 19.70 | A + 11.75 | 6.98 | 2.91 | - | 1.57 | - | 1.18 |
| IPTK | 25 | 2702999 | 496 | 18.00 - 40.00 | A + 8.66 | 19.69 | 4.92 | - | 2.99 | - | 1.77 |
| **Without Hoisting Eye** | | | | | | | | | | | |
| IPTKW | 2 | 2700966 | 8.82 | 3.00 - 7.50 | A + 3.13 | 4.92 | - | 1.10 | .98 | - | - |
| IPTKW | 3 | 2700967 | 9.92 | 3.00 - 7.50 | A + 3.13 | 4.92 | - | 1.10 | .98 | - | - |
| IPTKW | 4 | 2700968 | 13.9 | 5.88 - 11.25 | A + 4.00 | 4.92 | - | 1.30 | 1.38 | - | - |
| IPTKW | 5 | 2700969 | 19.4 | 4.75 - 13.75 | A + 7.67 | 4.92 | - | 1.30 | 1.57 | - | - |
| **With Improved Hinged Hoisting Eye** | | | | | | | | | | | |
| IPTKU | 2 | 2707996 | 12.8 | 2.95 - 7.48 | A + 3.94 | 4.76 | 2.99 | - | .87 | 3.90 | .75 |
| IPTKU | 3 | 2707997 | 14.3 | 2.95 - 7.48 | A + 3.94 | 4.76 | 3.50 | - | .87 | 4.80 | .87 |
| IPTKU | 4 | 2707998 | 21.8 | 4.72 - 11.02 | A + 5.91 | 5.51 | 3.50 | - | 1.57 | 4.80 | .87 |
| IPTKU | 5 | 2707994 | 26.4 | 4.72 - 13.78 | A + 6.89 | 5.51 | 3.50 | - | 1.57 | 4.80 | .87 |
| IPTKU | 10 | 2707970 | 83.8 | 7.87 - 18.11 | A + 11.81 | 7.87 | 4.13 | - | 2.36 | 5.98 | 1.02 |
| **With Optional Double Locking Device** | | | | | | | | | | | |
| IPTKU/D | 2 | 2709996 | 12.8 | 2.95 - 7.48 | A + 3.94 | 6.50 | 3.50 | - | .87 | 3.90 | .75 |
| IPTKU/D | 3 | 2709993 | 14.3 | 2.95 - 7.48 | A + 3.94 | 6.50 | 3.50 | - | .87 | 4.80 | .87 |
| IPTKU/D | 4 | 2709995 | 21.8 | 4.72 - 11.02 | A + 5.91 | 7.28 | 3.50 | - | 1.57 | 4.80 | .87 |
| IPTKU/D | 5 | 2709994 | 26.4 | 4.72 - 13.78 | A + 6.89 | 7.28 | 3.50 | - | 1.57 | 4.80 | .87 |
| IPTKU/D | 10 | 2709970 | 83.8 | 7.87 - 18.11 | A + 11.81 | 9.84 | 4.13 | - | 2.36 | 5.98 | 1.02 |

* Design Factor based on EN 13155 and ASME B30.20.

## IPTKW

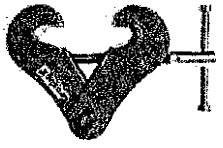

This IPTKW series beam clamp is suitable for use as a temporary tackle eye for a beam.

## IPTKU

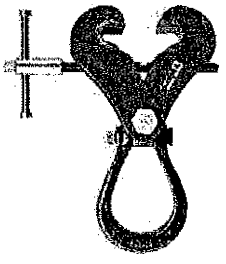

This IPTKU series beam clamp has an improved hinged hoisting eye that increases the loading angles and an optional new "Double Locking Device".

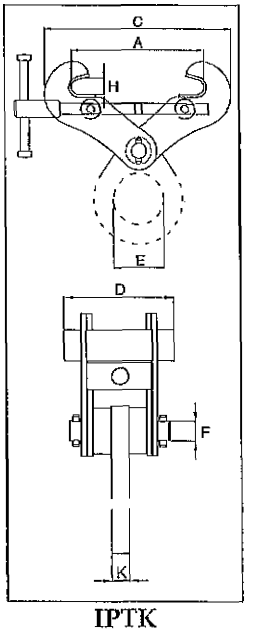


IPTK

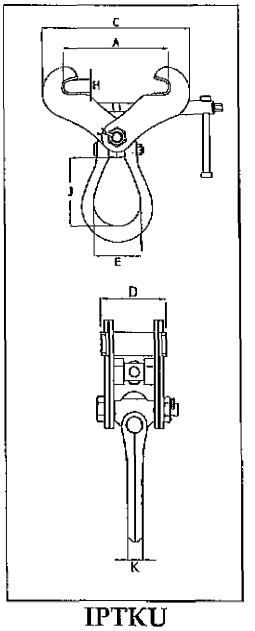


IPTKU

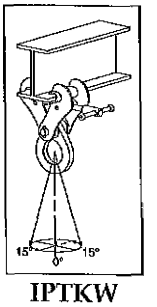


IPTKW

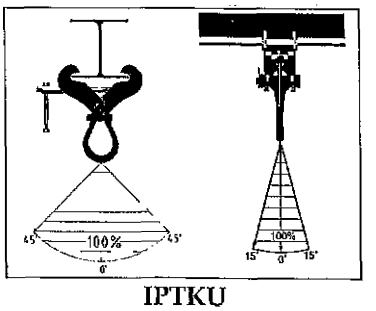


IPTKU

*Copyright © 2013 The Crosby Group LLC*
*All Rights Reserved*